This is a digital copy of a book that was preserved for generations on library shelves before it was carefully scanned by Google as part of a project to make the world's books discoverable online.

It has survived long enough for the copyright to expire and the book to enter the public domain. A public domain book is one that was never subject to copyright or whose legal copyright term has expired. Whether a book is in the public domain may vary country to country. Public domain books are our gateways to the past, representing a wealth of history, culture and knowledge that's often difficult to discover.

Marks, notations and other marginalia present in the original volume will appear in this file - a reminder of this book's long journey from the publisher to a library and finally to you.

Usage guidelines

Google is proud to partner with libraries to digitize public domain materials and make them widely accessible. Public domain books belong to the public and we are merely their custodians. Nevertheless, this work is expensive, so in order to keep providing this resource, we have taken steps to prevent abuse by commercial parties, including placing technical restrictions on automated querying.

We also ask that you:

+ *Make non-commercial use of the files* We designed Google Book Search for use by individuals, and we request that you use these files for personal, non-commercial purposes.

+ *Refrain from automated querying* Do not send automated queries of any sort to Google's system: If you are conducting research on machine translation, optical character recognition or other areas where access to a large amount of text is helpful, please contact us. We encourage the use of public domain materials for these purposes and may be able to help.

+ *Maintain attribution* The Google "watermark" you see on each file is essential for informing people about this project and helping them find additional materials through Google Book Search. Please do not remove it.

+ *Keep it legal* Whatever your use, remember that you are responsible for ensuring that what you are doing is legal. Do not assume that just because we believe a book is in the public domain for users in the United States, that the work is also in the public domain for users in other countries. Whether a book is still in copyright varies from country to country, and we can't offer guidance on whether any specific use of any specific book is allowed. Please do not assume that a book's appearance in Google Book Search means it can be used in any manner anywhere in the world. Copyright infringement liability can be quite severe.

About Google Book Search

Google's mission is to organize the world's information and to make it universally accessible and useful. Google Book Search helps readers discover the world's books while helping authors and publishers reach new audiences. You can search through the full text of this book on the web at `http://books.google.com/`

BROWN UNIVERSITY
JOHN HAY LIBRARY
PROVIDENCE, RI

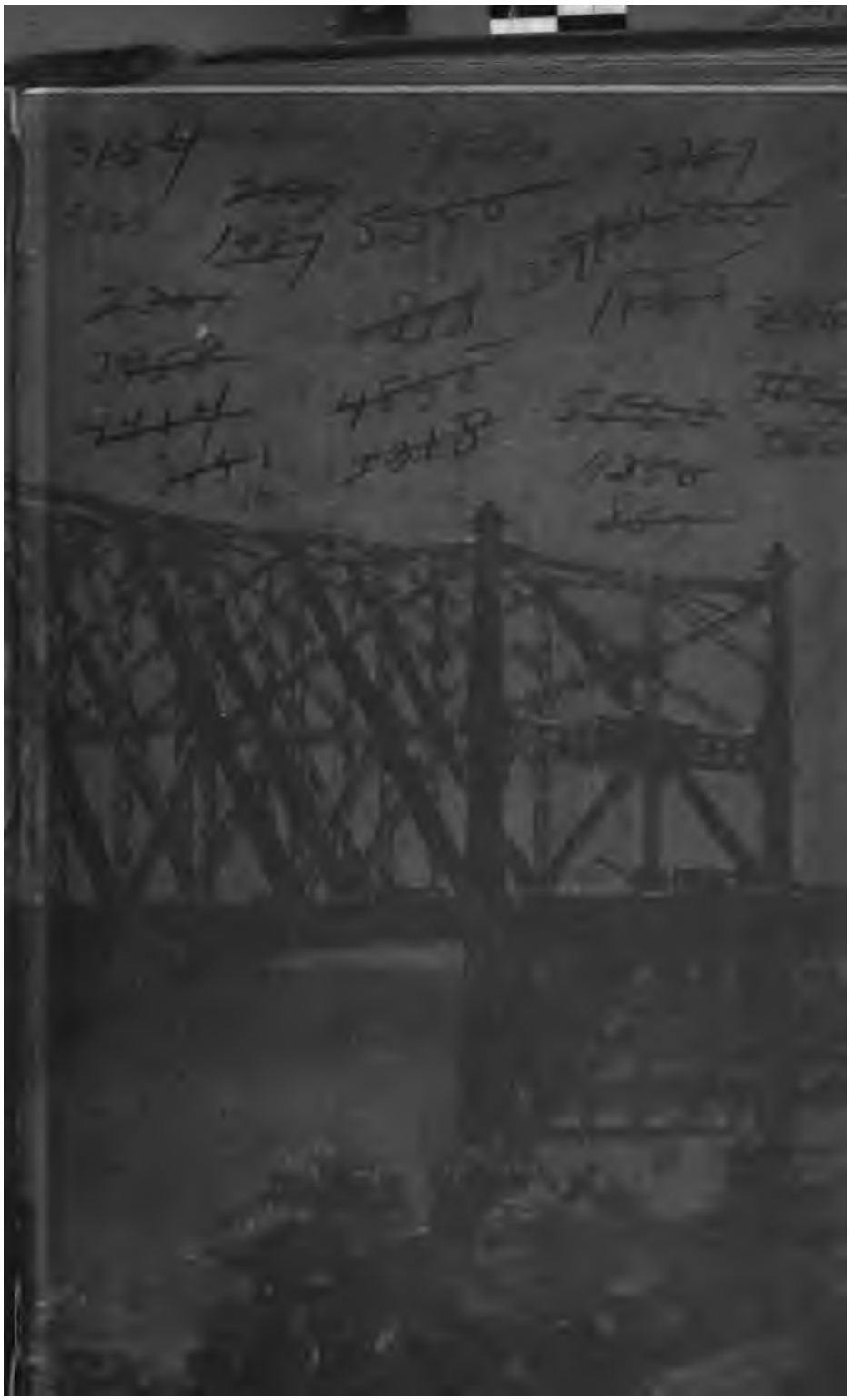

WEB OF STEEL

NBO
Brady, C.

By

Cyrus Townsend Brady

A Baby of the Frontier. Illustrated, 12mo, cloth . . . . . net $1.25

A captivating story of pioneer days and Indian adventures, which carries the reader in a sort of breathless gallop across the Western prairies. Mr. Brady is at his best throughout and relates the thrilling episodes surrounding the capture by a tribe of Cheyenne Indians of the little daughter of the commanding officer of Fort Sullivan with vividness and power.

The Little Angel of Canyon Creek. Illustrated, 12mo, cloth . . . net $1.25

"A capital and captivating story of the old days of the Western Colorado Mining Camps—days when a man's chances of returning to his cabin at night depended largely on his ability to 'draw a bead.' A tale brimful of vim and color incident to days and places where life was cheap and virtue rare."—*Christian Intelligencer.*

WEB OF STEEL

By

CYRUS TOWNSEND BRADY

Author of "The Chalice of Courage," "The Island of Surprise," etc.,

and

CYRUS TOWNSEND BRADY, JR.

Civil Engineer

ILLUSTRATED BY THE KINNEYS

NEW YORK CHICAGO TORONTO

Fleming H. Revell Company

LONDON AND EDINBURGH

Copyright, 1916, by
FLEMING H. REVELL COMPANY

THE NEW YORK
PUBLIC LIBRARY
183729B
ASTOR, LENOX AND
TILDEN FOUNDATIONS
R 1942 L

New York: 158 Fifth Avenue
Chicago: 125 N. Wabash Ave.
Toronto: 25 Richmond St., W.
London: 21 Paternoster Square
Edinburgh: 100 Princes Street

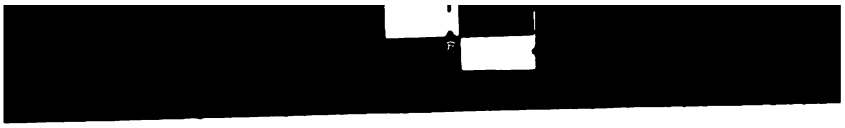

To

MYRA

Daughter——Wife

PREFACE

"WEB OF STEEL," as those who read will see, is a book for men, about men, and written by men.* The authorship is placed in the plural advisedly. The book is a real collaboration. In the minds of the writers there is a further pleasant association in the fact that it is a book about a father and son by a father and son, although no one must identify the writers with the characters in the story because of that relationship.

It is said that the success of a book, like the success of almost everything else that man at least undertakes, depends upon women; that women buy, read, discuss, and promote a novel, and if the book has no appeal to women it is forever doomed. The authors have at least proved themselves men of courage, the publishers likewise, for it cannot be too insistently set forth that this is primarily a book for men. The authors hope that even with that expressed limitation it may nevertheless appeal to women in some measure, especially those who would fain enjoy—the authors are careful not to say usurp!—masculine place and function. Let no one imagine, either, the authors hasten to assure those who may honor them by reading this preface, that there are no women in the book. On the contrary the fortunes of at least one of the men and the fate of the other are woven around the eternal feminine whom the authors

*Yet with true masculine inconsistency it it dedicated to a woman!

have striven to make as feminine and charming, as appealing and delightful, as their large experience with the other sex permits and warrants!

For the rest, whatever may be said of the fiction the authors rest confident in the engineering. Again let there be no misapprehension, this is a novel not a treatise; who runs may read, if he does not run too fast, and no scientific course is necessary for the comprehension of the story. The authors disavow any intention of picturing any engineers alive or dead, or any particular bridge or dam, in any particular locality. The whole thing is a work of the imagination except the calculations of the engineer, which are exact when not empiric!

The book is the result of genuine co-operation and accommodation. Father and son contended together in affection, albeit sometimes rather sharply, as to what should go in and what should come out. They are happy to have arrived at a substantial agreement which, while it satisfied neither author completely, yet produced a harmonious and consecutive story, with neither too much nor too little of the personality of either inserted or withdrawn to mar its symmetry. Now let all *man*kind read!

CYRUS TOWNSEND BRADY, *Father;*
CYRUS TOWNSEND BRADY, *Son.*

THE HEMLOCKS, PARK HILL,
Yonkers, N. Y.

CONTENTS

I

BRIDGE

I.	Love of Woman	13
II.	The Other Passions of the Engineer	27
III.	The Witness for the Defense	35
IV.	The Portage Through the Dust	45
V.	Fall and Revelation	55
VI.	They Cross the Bridge Together	65
VII.	The Colonel Makes Conditions	72
VIII.	The Lovers Make Pictures on Paper and Heart	79

II

C-10-*R*

IX.	The Deflection in the Member	89
X.	The Son of His Father Indeed	104
XI.	The Death Message on the Wire	110
XII.	The Failure	120
XIII.	The Woman's Choice	133
XIV.	For the Honor of the Son	138
XV.	For the Honor of the Father	151
XVI.	The Unaccepted Renunciation	164
XVII.	That Which Lay Between	171

III

DAM

XVIII.	Picket Wire and Kicking Horse	181
XIX.	The New Rodman	189
XX.	The Valley of Decision	194
XXI.	Marshaling the Evidence	205
XXII.	Working Up	222
XXIII.	The Former and the Latter Rain	234
XXIV.	The Battle	245

IV

SPILL-WAY

XXV.	The Ancient Art of Fascination	259
XXVI.	Once More Unto the Work	270
XXVII.	Brute Force or Finesse	280
XXVIII.	The Battle from Above	287
XXIX.	The Victors	303
XXX.	The Testimony of the Dead	317
XXXI.	At Last to the Stars	328

I

BRIDGE

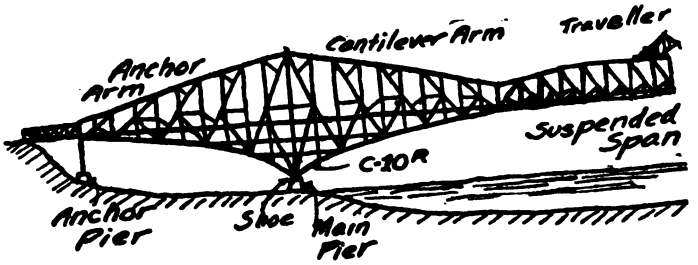
Cantilever Arm
Traveller
Anchor Arm
Suspended Span
C-10R
Anchor Pier
Shoe
Main Pier

I

LOVE OF WOMAN.

IF meetings only lived up to their anticipations, life would be a succession of startling climaxes. It had been some months since Meade had seen Helen Illingworth. He had dreamed of meeting her every day and had pictured the meeting differently and more rapturously after every letter. When Abbott had received a telegram from Colonel Illingworth stating that he and his party, including his daughter, would arrive the next day, all the anticipations of months had been concentrated and Meade had imagined a romantic meeting in which the longings and desires of the period of separation would all be summed up in one dramatic moment. As a matter of fact the whole thing was casual and ordinary to the last degree. It always is.

In the first place, Dr. Severence, a retired physician, who was vice-president and financial man, and Curtiss, the chief engineer of the Bridge company, were hard upon Miss Illingworth's heels as she stepped down from the car to the station platform. He saw her, as it were, surrounded by prosaic men. None of these men was a possible rival. Each was old enough to be her father so he could not really be jealous of them except in so far as he was even jealous of the wind that kissed her cheek—at least that is the way he put it to himself. There was a vein of poetry in this engineer, as there is in every man who achieves in whatever profession on

whatever field of work he may adventure. Gradgrind does nothing great, he mounts to no heights, he wins nothing really worth the winning by his worship of the facts of life.

Meade had no time to indulge his disappointment. He was busy in the exchange of greetings. The woman he loved got the same welcome and the same handshake as her father and the other two men. The commonplace conversation is scarcely worth recording. It was not until big Abbott, who had been belated by some sudden demand of work, came sweeping down the platform to engage the attention of the men that the anxious Meade had a moment with the girl herself.

Now Helen Illingworth had also been seeing visions, dreaming dreams and forecasting possibilities, so that she had been as disappointed as he. The only real satisfaction that either of them could take in the situation lay in the fact that the other was there. It was midsummer and the girl was dressed in some light filmy fabric which well became her radiant beauty. Meade could look at a bit of structural steel work and tell you all about it. All that he could have told you about the dress she wore, was that it was exquisitely appropriate, and presented an appearance of amazing simplicity for anyone who had the command of unlimited means for the adornment of her person. He could have figured out the cost of the most stupendous structure, but it never occurred to him that with a great price to a great artist Helen Illingworth had obtained that look of delightful simplicity. The gown he thought so modest and inexpensive, really represented the highest reach of the sartorial art as it is practiced by, and

upon, fair womankind. He could not know that Miss Illingworth had spent æons of time and riches in proportion, with the assistance of the best dressmaker in New York, over this very gown, and what was more to the point, for this very purpose.

Her maid had lifted her eyebrows behind her mistress' back when she had been bidden to get out this dress for a visit to the wild and primitive section of the country in which the great International Bridge was being erected. The woman knew, from what she had heard, that there was nobody there except engineers, contractors, supervisors, and workmen, and why all this superb and costly finery should be wasted on the desert air she could not see. Even her father, who was ordinarily indifferent to what his daughter wore, noticed it and commented on it when she appeared.

"I've had the dress now for over a month," responded Helen in answer to his observation, "and I want to wear it once at least before it goes out of fashion."

It was not wasted on Meade, she decided, as she caught his rapturous glance; that is, the details were, but the effect produced was entirely satisfactory and quite what she had expected. She had never looked lovelier. She was not a fragile, ethereal woman; quite the reverse. That was one of ten thousand things Meade liked about her. She was modern and up-to-date in every good sense of the word. She could do all those athletic and practical things that modern young women can do and she could do them well. Was it riding, or swimming, or golfing, or driving a speed-boat or motor-car, she took them as an ordinary girl takes bridge or the latest fantastic dance.

Meade was intensely practical and efficient. He could do all of those things himself and many more and he liked to do them, and that is one reason why he had been attracted to her; yet not for that alone did he love her. On that soft summer afternoon she looked as subtly delicate as every man would at one time or another have the woman he loves appear, and as far removed from things strenuous as if in another world! Distance and absence had but intensified the man's passion. He awoke to a sudden and overwhelming realization that he had been a fool in that he had utterly failed even in his most ardent thought to appreciate the true beauty and rare quality of this wondrous woman.

A wise philosopher has pointed out that humanity may be looked at from three points of view. There is the real John, there is the John that John thinks John is, and there is the John the world thinks John is. Meade felt that he represented all three when he looked at Helen Illingworth. Amid the emotions which the sight of her inspired in him, as he answered mechanically the natural and ordinary questions put to him by the men of the party before Abbott came on the scene and relieved him of that necessity, came a swift feeling of despair. He was wearing the rough clothes, flannel shirt, khaki trousers, heavy shoes and leggings, which were his habitual use at work. Contrasted with her filmy and delicately colored fabric his well-worn olive-drab habiliments stood forth hideously. That is, he thought so, and the contrast somehow seemed typical of the difference between them as he considered her.

What was he to aspire to such loveliness? In what

way did rough, rude, he measure up to such a graceful and dainty divinity? He was as humble as true lovers, of the male persuasion, usually are. She on the contrary was as arrogant as the opposite sex frequently is. The statement is made from the pre-matrimonial period! Yet, had he but known it, she was as pleased as he with the appearance of the beloved.

There was the careless insouciance of conscious power in the bearing of the engineer which differentiated him from most of the men with whom she had been thrown in contact during her life—the exceedingly well-trained, the exceedingly well-groomed young manhood of the present day. She recalled that even when her friends went for a hard day in the woods from the big house on the mountain above Martlet they always seemed to be clothed in outing togs immaculately new. Obviously the hand of little use with its daintier touch was not that appertaining to Meade. He was made for mastery and for manful work, even as she for, in that dress, softness and sweet attractive grace. He looked strength and the fact that he was power in submission, and strength in subordination, and so obviously hers to command, gave her a delicate thrill; the same sort of thrill the great engine-driver feels when he lays his hand on the throttle. It is not only Budge and Toddy who love to see the wheels go 'round. And everybody wants to set them in motion. She looked covertly upon him as a lion-draped Omphale might have looked at Hercules, even though Meade bore no distaff in his hand.

The International Bridge was the biggest thing of the kind the Martlet Company or any other American

structural plant had ever undertaken. It had been a constant topic of conversation wherever her father was. She had heard all about it and although, strictly speaking, the bridge was the work of Meade, Senior, yet she always identified it with Meade, Junior. There was a feeling in her mind that it was her bridge and that, through him, she commanded it. She was a supremely assured and entirely confident young lady, yet as the sheer and filmy mousseline-de-soie with its garniture of lace even more delicate was driven by the wind against the rough nondescript garment of the man by her side she experienced a passing sense of uneasiness, such as one might conceive the butterfly would feel in the presence of a steam hammer. Yet Helen Illingworth was not a butterfly and no more was Bertram Meade a steam hammer, at least not to her.

They were just two young people desperately in love, neither quite sure of the other, at least no assurance had been given or asked, and although the man was thirty and the woman twenty-four they loved just as if their passions had been born in the first unthinking hours of youth and maidenhood.

Experience and observation have established the fact that the whorls on the thumbs of human hands differ in tracery as one star differeth from another star in glory, and that so far as humanity can draw a general inference without having observed all the instances, no thumb is like any other thumb that has ever complemented fingers since Adam first inspected his pickers and stealers. The Power that can stamp this infinite variety in the human skin has seen to it that there are no duplications in human temperaments. Infinite is the

variety of woman while women collectively are as various as that infinity raised to the *n*th power. The love story of every man and woman differs in some particular from that of every other man and woman. Again a sweeping deduction from perhaps inadequate observation. Yet men who have loved many have observed the variation in specific and particular instances and such single-hearted experiences as have been set down for the ruthless scrutiny of the ethic philosopher have borne out this contention.

But if it be true, as it is generally admitted, that love-making is individual and different, in one particular various woman changeth not. At sweet-and-forty given the conditions and the man she will love just as she might have—or did—at sweet-and-twenty. It well may be, God knows, that she will love the same way at sweet-and-sixty. Which is to say that although both the young people in this veracious romance had passed the period of—shall we say the Sweet Evelina age?—they were both affected just exactly the way they would have been affected if she had been eighteen and he twenty-one.

They were as awkward and constrained when left to themselves as if one had not been all over the world on man's jobs for a decade and the other had not queened it among the nicest girls of the land for half as many years. And with thoughts burning, passionate, and words embarrassingly torrential at hand to give them utterance they only spoke commonplaces!

"How is the bridge getting along?" asked the girl, repeating her father's words of a few minutes before, as these two fell behind the others marching down the long

platform, while the maid standing by the private car with the porter looked curiously after the moving group and wondered if that grey-green, long-legged, young man was the reason for the New York gown!

"It's doing splendidly," was the answer, and even with his heart full of the girl by his side whom he longed to clasp in his arms but did not even dare touch the hem of her garment, some little enthusiasm came into his voice. "It is the greatest bridge that was ever erected," he said.

"How you love it," said the girl.

Did Meade love the bridge? Ah, there could be no doubt as to that.

He had studied its growth hour by hour. As the great steel web rose grandly from the pier under the hands of the busy workmen and the arms of the great traveler, his heart expanded with it. He took pride in it that increased as panel succeeded panel. He had followed it with even more heart-consuming interest and anxiety when they began to push the suspended span across the river on the outer end of the completed cantilever, toward its fellow rising on the other side. Its obsession of his soul was so strong and so complete, that he could scarcely tear himself away from it to do necessary work at his desk.

He lingered about it when the rest of the work-a-day world which was concerned with it had withdrawn to rest. Frequently late in the night he had arisen and had left the sheet-iron shack he occupied near the work (for the topography of the land and the course of the river had determined the location of the bridge far from any town), and had stood staring, fascinated, by

its dim mysterious outline, high upraised against the stars, until its details were lost in the blackness overhead. Or were it moonlight, he had gazed bewitched by the great web of steel, all its mighty tracery delicately silvered, faintly outlined, lace-like, lofty, lifted high into the heavens.

He fell into a little reverie for a brief moment from which she recalled him.

"Well?" she asked.

Was there a little wistful, jealous note in her voice? He looked at her quickly as one essays a swift glance at the sun and then averted his eyes, and from the same cause. She blinded him. He really felt that he could not look at her continuously without declaring his passion before the whole world. There was much of the feudal champion in him. The civil engineer is the last survivor of the type in this modern and prosaic work-a-day world anyway. Nothing would have pleased him better than to have seized her before everybody, then and there, crushing that filmy gown against his rougher clothing, and to have borne her triumphantly away. Knight errant or cave man? There are points of similarity between them of which the world is perhaps not aware. He was ready to fill both rôles, and counted himself unlucky in that there were no dragons present, although on occasion Colonel Illingworth might have essayed that part with some success.

"Yes, naturally," he found himself saying in a conventional tone of voice, "it means a great deal to me. My father——"

"Oh, your father," she began indifferently, although she knew and liked the great engineer.

"It is his crowning work and——"

"Your beginning."

"It is not in me, or in any engineer, to begin where my father left off," he said, "but in some way it is a beginning for me. What little I have done heretofore——"

"Little?"

"Yes. It isn't really very much. It seems more than it is. Anybody could have done it."

"Absurd."

"It doesn't amount to very much to me at least," he went on, smiling at her interruption, but pleased at it. "But this will count a great deal, because through father's kindness I had some hand——"

"I believe you did it all," interrupted the girl.

He broke into sudden laughter and his merriment had that boyish ring she liked. He seemed to think that was a sufficient answer to that statement, for he went on quickly.

"How long shall you stay?"

And in spite of himself he could not keep his anxiety out of his voice.

"I think father's going on to the city some time tomorrow—probably in the morning."

Meade's face fell.

"So soon as that?"

"I will try to persuade him to stay longer. I've seen lots of bridges built but never one like the International, and I should enjoy standing by and watching you work."

"I don't do the work. Abbott does that, and the men, of course."

"Your work is the work that makes possible and profitable the labor of the others," she persevered. "You plan, you lead, the rest only follow. By the way, father told me to ask you and Mr. Abbott to dine with us tonight in the car."

Meade's mood changed into positive gloom.

"I can't," he said dejectedly.

"Have you some other engagement? Are you dining with some other people more to your fancy?"

"You know there is no one here but Abbott, the foremen, and the workmen."

"Why not, then?"

"I haven't any clothes, neither has Abbott. We left our dress suits behind us when we came into the wilderness to work."

"Oh," she laughed. "What difference does that make? Come just as you are. It will be a relief. I like you that way. I get so tired of black and white," she went on quickly to prevent him from taking advantage of her incautious admission.

Happiness came back to his soul at that. He had a half-formed notion of perpetually preserving these garments that she liked and hanging them up in his ancestral hall, as men did suits of armor which they had proved in strife, to which their descendants could point with pride. Just an old suit of olive drab which she liked—the love of woman can dignify anything in the mind of the man she loves.

The half-formed project died, however: for one thing he had no ancestral halls.

"Really," he found himself saying, "it's awfully good of you, but I don't think I should with no gar-

ments suited to the occasion. I tell you what I'll do. I'll motor over to the town "—it lay some twenty-five or thirty miles away—" and get myself a proper outfit."

" It will take so long and I shall be here only until tomorrow," she said softly.

" Hang the clothes," said the man, radiant once more in that admission, " since you will allow it I will come with what I can rake up. But you'll have to tell me which fork to use and give me expert advice in those customs of polite society which I have almost forgotten out here in the wilderness."

" I'll do my best," returned the other. " And after dinner and you have had your smoke with the men, we will go down and look at the bridge by moonlight."

" And what will you do meanwhile if I should smoke with the men? "

" I will wait," said the woman with mock humility. " Women always wait while men smoke unless they smoke themselves, don't they? "

" And you have not learned that? "

" Not yet. It makes me feel dreadfully old-fashioned sometimes, but I have never even tried a cigarette. I don't wish to."

" I love——" he began, and then stopped amazed at his own hardihood, fearful of the possible consequences of his almost betrayal.

" You what? " she asked daringly, with another swift glance as swiftly withdrawn.

" I—I like women who do not smoke," he answered lamely, which was not at all what he intended to say, but which was nevertheless an approval of her course. " But if you think that with the possibility of but a few

hours in your society I am going to sit around and smoke with your father or Abbott or Severence or anybody on earth you are sadly mistaken. I can smoke with men any time I wish, but I can only talk to you once in a lifetime."

"It isn't six months since you were at our house."

"Six months! It's a thousand years," he went on, "and I'm going to take you out on the bridge after dinner. It's great at any time. It's the most magnificent sight on earth even now, but in the moonlight—there it is now," he pointed as the little group walked past the station which had hid the view and the great structure suddenly was revealed to them.

Unconsciously the engineer used the neuter pronoun for the great structure which for all its sexlessness had still a being and a life.

It is the habit of man to imbue with personality the thing inanimate that he loves. Furthermore as love naturally is associated in the masculine mind with the opposite sex, he generally describes that genderless thing without life which is nearest his heart as "she." Witness the sailor and the ship, the railroader and the train, the chauffeur and the car. The bridge engineer is the exception to the rule. The great structures which he flings from pier to pier, which he stretches from bank to bank, which lift themselves above rivers and mountain gorges and arms of the sea, are always neuter. "It" is the proper pronoun.

The four men ahead had stopped and stood silent. There was something awe-inspiring and tremendous about the great, black, out-reaching, far-extending arms of steel. The first sight of it always gave the

beholder a little shock. It was so huge, so massive, so grandly majestic, and withal so airy seen against the impressive background of deep gorge and palisaded wall and far-off mountains. So ether-borne was it in its perfect proportion that even dull and stupid people—and none of these were that—felt its overpowering presence. Meade and the girl stopped, too. After one glance at the bridge she looked at him. And that was typical. For the first time he was not at the moment aware of, or immediately responsive to, her glance. And that too was typical. She noted this with a pang of jealousy.

"You love the bridge," she said softly.

He straightened up and threw his head back and looked at her.

"I thought so," he said simply,—"until today, but now"—he stopped again.

"But now?" she asked.

"I have just learned what love really is and the lesson has not been taught me by the bridge," he answered directly.

II

THE OTHER PASSIONS OF THE ENGINEER.

YET Bertram Meade, the younger, did truly love the bridge which he had seen grow from the placing of the first shoe—the great steel base on top of the pier which carries the whole structure—to the completion of the soaring cantilever reaching out to meet its companion on the other side. Meade, Junior, although he had turned his thirtieth year, was indeed young for the position of Resident Engineer, in the interests of his father the designer, of such a bridge as the great International, which was to be the tie that bound, with web of steel, two great countries which lay breast to breast; already in touch save for the mighty river that flowed between them.

By no means would Meade, the younger, have been charged with the great responsibilities of the Bridge had it not been for two things, neither of which would have warranted his employment in that position by the Martlet Bridge Company, but which taken together induced them to give him a trial. The first was his exhaustive preparation and wide experience. No one had ever started in a life profession with better equipment than Bertram Meade. To a thorough technical training at Harvard in the Lawrence Scientific School, had been added a substantial record of achievement. A fine bridge which he had erected in faraway Burma, triumphantly achieving the design despite all sorts of

difficulties, had attracted the attention of old Colonel Illingworth, the President of the Martlet Bridge Company.

He had kept the young man under his eye for a long time. When he commissioned his father, Bertram Meade, Senior, to prepare the plans for the great International, the most sought for and famous of bridges, he had noted with satisfaction that the older man, who stood first among the bridge engineers on the continent, had associated with himself his son. Meade, Junior, had recently returned from South America, where he had again shown his mettle. The two worked together in the preparation of the designs for what was to be the crown and triumph of the older man's life, the most stupendous of all the cantilever bridges in the world.

Indeed there was almost as much sentiment as science entering into the designing in the great engineer's soul. After the completion of the International he intended to retire from the active exercise of his profession. If he could withdraw with the consciousness that he had linked together two great peoples and that through the arteries of trade which ran across his bridge their hearts would beat in greater harmony, he would consider that the end had crowned all his work.

He had a high idea of his only son's ability. He was willing to proclaim it, to maintain it, and defend it against all comers except himself. When the two wills clashed he recognized but one way, his own. The relations between the two were lovely but not ideal. There was leadership not partnership, direction rather than co-operation. The knowledge and experience of the boy—for so he loved to call him—were of course noth-

ing compared to those of his father. When, in discussing moot points, the younger man had been unconvinced by the calculations of the elder, he had been laughed to scorn in a good-natured way. His carefully-set-forth objections, even in serious matters, had been overborne generally, and by triumphant calculations of his own the father had re-enforced himself in his conclusions; and the more strongly because of the opposition.

Young Meade's position was rather anomalous anyway. He had no direct supervision of the construction. He was there as resident engineer representing his father. He had welcomed the position because it gave him an opportunity to see from the very beginning the erection of what was to be the greatest cantilever bridge the feet of the world had ever trod upon, the wheels of the world had ever rolled across.

He had followed with the utmost care, constantly reporting the progress to his father, every step taken under the superintendence of Abbott, a man of great practical ability as an erector, but of much less capacity as a scientific designer or office engineer. Meade had watched its daily growth with the closest attention. Like every other man in similar case, the work had got into his blood. It had become a part of his life. He watched it when he was in its presence, he listened for it when in the office and out of sight. The rat-tat-tat of the pneumatic riveters was music to him. Even the greater harmonies of the wind which blew ceaselessly through the deep gorge where the river ran two hundred feet below, diapasoned through his very brain.

In any mood or under any sky he liked it, even when

the rains fell upon it and the winds screamed about it standing indifferent to both assaults. But perhaps it appealed to him most at twilight when the hardness and harshness of all the rigid lines of metal, still to be seen plainly in their completeness, were softened in the veiling obscurity of the half light, glowing palely red on the western hills. Then the bridge, poised upon its great pier with its gigantic arm extended over the water dark from the withdrawn sun flowing swiftly beneath, was most beautiful to him.

Yes, Bertram Meade loved the bridge; yet more he loved Helen Illingworth. Should the comparative be used? Right-minded men love many things. Even though they love honor and fame and opportunity and labor and persistence and achievement, they also love their kind; the aged parent, the loyal friend, the happy child. And some love sorrow and some love laughter, but all love woman.

Sometimes there is strife between these various passions. Happy the man who can enfold all the others within his heart without forfeiting or lessening his love for woman. Bertram Meade was that sort of man. He never troubled himself to decide among conflicting claims. They did not conflict. He loved the bridge as he loved his father; and as he loved Helen Illingworth primarily, there was no incompatibility of appeals in this trio of affection.

Sometimes, in fantastic moods, the younger Meade wondered if the bridge in some strange way could feel what it was to him, if it could know that it was more to him than to any man on earth. To Abbott it was a big job, to his father it was the crowning achieve-

ment of a lifetime of designing. To Meade, Junior, it was life itself. Because he had somehow decided that as the completion of the International meant much to his father, so also should it mean much to him. For on the day on which it stood finished and triumphant he would venture to ask Helen Illingworth that question which had trembled on his lips a hundred times since he had known her. Until that day he would keep silent.

After the woman, the young man almost idolized his father. Motherless from birth, the older man was all the family the younger had. His father's greatness had impressed itself upon him even before he was old enough to know what greatness was, or in what particular his father could lay claim to it. Nor was the older man so engrossed in his profession, as is often the case with greatness, as to neglect the smaller things in life. The young wife of the elder Meade, new-made a mother, died in childbirth and that made a great difference to the boy. Remorseful and repentant Meade was careful to make the boy his companion, by way of reparation at first and later because it was joy and its own reward to him. The two were thrown together the more by the untoward disappearance of the woman.

The childish admiration of the lad developed into an adoration of his father. When he grew up to be an engineer himself, on more than one occasion he was brought in contact with his father's work and he was able to appreciate its characteristic fineness, its superb solidity, the scientific mastery of the technique of the profession which it indicated. Perhaps his devotion to his father and to his profession, in which his aim had been to be worthy of the older man's great reputation,

to live up to it, had so obsessed his mind that hitherto the attraction of womankind had not been very great.

Bertram Meade had enjoyed minor affairs of the heart, as have most young men, but they were ephemeral and evanescent until he met Helen Illingworth. He had taken her in to dinner in her father's house on his first visit to Martlet as the emissary of his own father about the plans of the bridge. It was summer and the Illingworths chose to pass a portion of it in the great big house on the mountain, the top of one of the peaks of the Allegheny range, where Colonel Illingworth could get down to the bridge works in the valley without difficulty if there was need.

Young Meade's life had been a roving one. He had met women all over the world, but he had never spent much of his time in social America and this was the first splendid American girl, gloriously representative of her class, with whom he had come into any intimate contact. He fell in love with her out of hand and although he scarcely dared to dream it—his experience had not made him very bold where such women as she were concerned—he did not fall alone.

There was back of Meade a solid record of substantial achievement in far countries and among strange peoples, where he had been confronted by unknown demands and beset by mysterious dangers. Straight and bronzed and tall and confident enough, except when he looked at her, with the assurance that comes from achievement, and with strength mental as well as physical written all over him, Meade was the modern representative of the ancient guild of soldiers of fortune. He looked at life as the knight-errant of other days who faced the world

lordly a-horseback and laid it under tribute of his sword and spear, and to whom the service of woman was the highest duty, the greatest privilege, the supremest pleasure.

Meade was the means of communication between his father and her father. He was often at Martlet that summer. He met her in the city in the winter. He followed her for a brief visit to the South. The next summer found everything settled but a proposal on his part, and an acceptance upon hers. Proposals bear the same relation to love affairs that prefaces do to books. They seem to come first, but in reality they are the last things said or written. And for the time to speak or write he waited for the bridge, she for him.

Indeed Helen Illingworth had been very much vexed at her somewhat restrained lover. She resented it that a man who had been a construction engineer at home and abroad, could possibly be timid even before a woman. When he had not spoken the fateful words at their last meeting she could scarcely veil her disappointment from him. She made no effort to conceal it from herself. And when the engineer came to think of what had happened he cursed himself for a fool, because he had not put everything to the touch. Yet he felt the proper hesitation in which a man should always approach a woman, especially if he craves success. He was not sure of her. It might be that she would say no. The fall of the bridge could hardly have dismayed him more than that possibility. And it was after all better to wait until he had done his work and could point to his not inconsiderable share in it before he did speak. In his ignorance of the feminine heart he half fancied such

an achievement might plead for him! He knew not that he needed it not.

So with father, bridge, and woman in his heart—the last as usual being first—Bertram Meade was very much a lover as he stood on the temporary siding and watched the engine drawing the special train, to the end of which was attached her father's private car, rolling down the track toward the bridge for a summertime excursion under the guise of an inspection tour.

If anybody could have weighed in a balance his respective passions, as he stood there by her side confronting the bridge, he would have discovered that for once at least father and bridge together were flying high into the air, uplifted by the power of a greater, a more natural and a final passion.

After all in the long run it is a woman, even though scarcely more than a stranger, who will win over the greatest bridge or the finest parent the world may know—especially in the case of a young man!

III

THE WITNESS FOR THE DEFENSE

ONE of the pleasantest evidences of the possession of riches is in the luxury of a private car. Although Colonel Illingworth was personally a man of simple tastes as became an old campaigner, there was no appointment that wit could devise or that money could buy which was lacking to make his private car either more comfortable or more luxurious. Colonel Illingworth did not take large parties with him on the "Martlet," for so he had named the car. Indeed the two men and his daughter, with the cook or steward and the porter and the lady's maid, about exhausted the capacities of the car, so that there was an unusually large observation room at the end.

Anything that partook of luxury and refinement would have been of deep interest to Meade and Abbott, who had been removed from both for a long time on the work. But in its napery, glass, china, and silver, that dining table needed not to apologize to any other anywhere. The Colonel was most punctilious in dressing his part and although he willingly condoned the fact that neither Meade nor Abbott had brought evening clothes to the camp, he and his guests were arrayed to fit the table.

As for his daughter, she had put on her very best. The rude hand of mere man could not hold pencil sufficiently delicate to describe her radiant apparel. Meade,

who sat nearest her, could not do it, albeit he never took his eyes off her if he could help it. Neither could the other men who looked at her so admiringly, even though one of these was her father and the other two were well and, considering the years and sizes of their several consorts, fatly married!

Again the French maid had lifted her brows surreptitiously when this gown had been ordered extracted from its wrappings and protecting tissues. She did not lift them quite so high however, because now with the sharpness of her sex and trade, she knew why Mademoiselle's best had been taken on the train and donned on this occasion. It was for the engineer who sat by her side at the table in the observation room.

If anything had been needed to reduce this said engineer to a condition of helpless impotency and despair it was this new gown. Some women's clothes wear the women, and others women wear! This is an orphic way of saying that some women clothes make, while others make the clothes. Oh, not by hand, not by any deft stitchery, but by personality. It was always difficult for mere man to describe one of Helen Illingworth's gowns, only an observing, and unprejudiced, woman could do that.

Of course every wise man knows, in spite of vehement assertion to the contrary, that as a rule women dress for other women, not for men. That claim that they dress for men is usually urged to placate the bill-payer and absolve the feminine conscience, but it is not true, that is generally speaking. In this instance, it was. There was no woman to be dazzled by Helen Illingworth's apparel in that car unless it was Celeste, the maid.

No man is a hero to his valet, eke no woman a heroine to her maid. She did not usually care greatly about any impressions she made on Celeste, although the vivacious, enthusiastic expressions of approval she aroused in her factotum that night were balm to her soul. She wanted somebody to tell her how well she looked; not from vanity but as a forecast of the impression she would probably make on her engineer.

It had taken him little time to make his toilet. He rejoiced in a business suit, new and from the best tailor. He was a fastidious man in such matters, and it fitted him and became him amazingly. Abbott was dressed likewise. They were both scrubbed to within an inch of their lives, but climbing about the bridge their hands were scratched, roughened, stained, and torn. Aside from that, Meade was certainly most presentable, and old Abbott, in spite of his indifference to such matters, looked the able and powerful man he was.

The conversation at dinner was at first light and frivolous.

"I'm lost," began Abbott, "overpowered with all this silver and glass and china."

"Yes," laughed Meade, "we should have brought along our granite ware and tin cups, then we would be free from the dreadful fear that we are going to drop something or break something."

"You can break anything you like," said the Colonel with heavy pleasantry. "Make hash out of the china and cut glass," he went on with a delightful mixture of metaphors, "so long as the bridge stands."

"And that is going to be forever, isn't it, Mr. Meade?" asked the girl quickly.

"I don't think anything built by man will survive quite that long," he answered as much to her father and the others as to her, "but this gives every promise of lasting its time."

"You know," observed Curtiss, "there was some question in my mind about these big compression members. When I first studied your father's drawings I wondered if he had made the lacing strong enough to hold the webs."

"That matter was very thoroughly gone into," said Meade quickly. "It was the very point which I myself had questioned, but father is absolutely confident that we provided latticing enough to take up all the stresses. I looked into that matter myself," he went on with much emphasis.

"I guess it's all right," said Curtiss lightly. "I examined the webs and lacings carefully this afternoon. They seem to be as right as possible."

"Those trusses," said Abbott emphatically, "will stand forever. You need not worry about that."

"Are you going to finish this job on time?" asked Severence, the vice-president. "You know the financial end of it is mine, and much depends upon the date of completion."

"That depends upon you people at the shop, Doctor. If you get the stuff here to me I'll get it in place in short order," answered Abbott.

"There's an immense amount of work still to be done on the bridge, though," said Curtiss, "and you can't let up a minute if we are to complete it within the limits assigned."

"I don't expect to let up a minute. If necessary I'll

get more men and work them in two shifts, or even three. Don't worry about that, gentlemen."

"We aren't worrying about anything with you and Meade on the job, Abbott," said the Colonel genially.

"Yes, you are, father," said the girl, "begging your pardon, you live bridge, and think bridge, and sleep bridge, and eat bridge, and drink bridge."

"Mercy," laughed the Colonel. "I must have a digestion that is a cross between that of an elephant and an ostrich. I'm glad I don't play it, too."

"You know what I mean," said his daughter. "Ever since the International has been started you have scarcely been able to give a thought even to me. I'm tired of it. I hope the old thing will soon be finished so that we can all go back to normal life again."

"I hope so, too," assented the Colonel, "and I guess you are right. The fact is the bridge is an obsession with us all. It is the biggest job the Martlet has ever handled. Indeed it is the biggest thing in the world. It's the longest cantilever, the greatest span, the heaviest trusses, the——"

"I've heard all about it," interrupted the girl, waving him into silence, "ever since you began it. Sometimes I think it's beginning to obsess me, too."

"You don't look like it," whispered Meade, under cover of the general laugh that greeted her remark.

"What do I look like?" she whispered back quickly in return.

But Meade had no opportunity to tell her save in so far as his eyes spoke for him because as the laughter died away the Colonel took up the conversation. That silent language which the young engineer spoke with

his eyes, however, must have been quite intelligible and easy for her to understand. Her color was already high, but in the excitement of his glance in an indefinable anticipation of something, she could not exactly tell what, it deepened a little under that direct almost fierce glance.

"It is not exactly a subject for dinner conversation," said the Colonel with sudden gravity, which proved how keenly his daughter had realized his overpowering interest in the great undertaking, "but all of us here, even you, my dear, must realize how much that bridge means to us. I won't go so far as to say that its failure would ruin us, but it would be a blow both to our finances and our fame that it would be hard for us to survive."

"Have you ever known anything that my father designed to fail?" asked Meade somewhat hotly.

"No, and that is why we took his plan in spite of——"

"In spite of what, sir?"

"In spite of Curtiss here and some others."

"Mr. Curtiss," said Meade, turning to the chief engineer, "if it will add anything to your peace of mind I will assume my full share of responsibility for the matter. You know the books by Schmidt-Chemnitz the great German bridge engineer?"

Curtiss nodded.

"At first, I, that is we, thought that there might possibly be weakness in those compression members, but I checked them with the methods he advocates and then submitted the figures to my father and then he went through the whole calculation and applied coefficients he felt to be safe."

"I'm willing to take your father's judgment in the matter rather than Schmidt-Chemnitz', or anybody's," said Curtiss, "so successful has been his career."

"Now that I have seen the members in place I have no doubt that they will stand," said the Colonel.

"Sure they will," added Abbott with supreme and contagious confidence, an assurance which helped even Meade to believe.

"Of course we all know," said Dr. Severence, who had been long enough in touch with engineering to learn much about it, "that there is always more or less of experimenting in the design of a new thing like this."

"Yes," said the Colonel, "but we don't want our experiments to fail in this instance."

"They won't," said the young man boldly.

He had long since persuaded himself that he had been all wrong and his father all right, so that he entered upon his defense and the defense of the bridge with enthusiasm. He was ready to break a lance with anybody on its behalf.

"Well," began the Colonel, "we have every confidence in your father and in you. I don't mind telling you, Meade, it need not go any further, that when this bridge is completed we shall be prepared to make you personally a very advantageous offer for future relations with the Martlet Company if you care to accept it. On the strength of your probable acceptance we are already planning to venture into certain foreign fields which we have hitherto not felt it to our interest to enter."

"That is most kind of you, Colonel Illingworth," said the young man gratefully, "and it appeals to me

very strongly. I have been associated with father latterly. He wants to retire with the completion of this bridge and before I open any office of my own I should like the advantage of further experience. Such a connection as you propose seems to me to be ideal, from my point of view. No man could have any better backing than the Martlet Bridge Company."

"Well, we shall look to you to be worthy of it," said the Colonel kindly.

His glance vaguely comprehended his daughter as he spoke. Colonel Illingworth was a very rich man. The Martlet Bridge Company was nearest his heart, but he had many other interests. His only daughter would eventually be the mistress of a great fortune. She could have married anybody—anywhere. Indeed Europeans of high station and ancient lineage had already indicated quite plainly their willingness to ally themselves with beauty and—is it doing them an injustice to say booty, as well?

But Miss Illingworth would have none of them. She was an American to the very core and so proud of it that no old-world title or position could buy her. None of these distinguished gentlemen of foreign birth who had come a-wooing had made any lasting impression upon her. She was now convinced, and for all her life she was sure, that she wanted more than anything else just one American man in the engineering profession! She could have him for the taking, she knew. And she wished *he* knew it, and would act upon the knowledge without further delay.

Meade was not poor. Of course, his means were limited compared to Colonel Illingworth's great for-

tune, but what he had earned, saved, and invested was sufficient—yes, even for two. And he would inherit much more. Old Meade had not been the greatest engineer of his generation for nothing. Independent and self-respecting, young Meade could not be considered a fortune-hunter by anybody. He was the kind of man to whom a decent father likes to intrust his daughter. Old Colonel Illingworth found himself gazing wonderingly at the two in a way that again deepened the flush of color in his daughter's cheek as she caught his look. She was relieved that Meade had not happened to observe it.

Had he been blessed with a son by his long dead wife he would have been proud if he had been the type of man that Meade was, thought the Colonel, as he mused on all these possibilities. Perhaps Meade and Helen might—who could tell? He sat silent, so far as he could as host, during the latter part of the dinner, in his turn seeing visions and dreaming dreams. There was a contagion of that sort of thing around that bridge, it would seem.

After dinner the men went out on the observation platform with their cigars and coffee. For those that liked it there was something in tall glasses in which ice tinkled when the glasses were agitated, but Meade declined all three.

"With your permission, sir," he said, "I am going to take Miss Illingworth out on the bridge. The moon is rising and——"

"I have heard so much about it," said the girl, standing by the door. "I want to see it when the workmen are all off and it is all quiet, in the moonlight."

"Very well," said the Colonel. "You will be careful of her, Meade?"

"I'll be more careful of her than we are of the bridge, sir," was the prompt answer.

"And you had better change your dress, Helen, before you go," said the Colonel, turning to Abbott and engaging him in conversation on technical matters.

"I'll wait for you at the front door of the car," said the engineer, his heart beating like a pneumatic riveter and sounding almost as loud in his ears.

As she turned to her stateroom he decided not to break the delicious anticipation of the coming adventure by talking about it to anyone or by seeing anyone but her. He just wanted to wait for her alone in the dark until she came, so he followed her down the corridor to the other end.

"I won't be long," she whispered as she left him.

He took that with a grain of salt. A second that she were away when she might have been with him, would be a long time to him, he knew.

IV

THE PORTAGE THROUGH THE DUST

NOW Helen Illingworth did not want to waste time any more than Bertram Meade did. It was, of course, the height of foolishness for her to explore a half-completed bridge, or an entirely finished one for that matter, in an elaborate and expensive dinner gown. But whatever her age or his they were at that period of life and love in which, if ever, humanity had a clear title to be foolish—and there you are!

Economy had not necessarily been inculcated in this young woman's mind and although she prized the dress it had served its purpose, since the man so obviously highly approved of it and her. If she spoiled it she spoiled it and that was all there was about it. She dismissed that possibility promptly. There was nothing else she could wear which was so exquisitely becoming, anyway, and especially in the moonlight. So, instead of taking her father's advice all she did was to cover her beautiful shoulders with a light wrap, gather the train of her gown in her hand and hasten to the car door in the shortest possible time. She did not even stop to change the light slippers and filmy stockings she wore, satin and silk of the same delicate tint and fabric to match her gown. It was a warm summer night and she needed no covering except nature's golden crowning on her head.

Every moment they were apart, since the sum-total in which they could be together was so small, was a moment lost. What were all the dresses and slippers on earth to the pressure of his hand, a glance from his eyes? She was very much in love with him and he with her then, and thereafter.

"Now," she said, coming out of the door of the car and descending the steps toward him, eagerly expectant, "I want a prize for my swiftness."

"A prize!" returned the man, "why, you've been gone years and years and years. You have had time to dress yourself a thousand times, and you haven't even changed your gown. What have you been doing? How have you idled away precious time you might have bestowed upon me?" he concluded reprovingly in mock severity.

"I think that it's less than sixty seconds since you said you would wait for me here," she laughed in joyous satisfaction.

"Of course, time seems shorter to you than it would to me," was his cool reply. "It naturally would. You don't have to wait for any man, things come always to you."

"If you can refer to me as a thing, Mr. Meade," she replied, "in this instance I have come to you."

"I thank heaven you have done so, but unfortunately I shall have to dismiss you."

"Dismiss me, why?"

"You can't go out on a bridge in that gown and those slippers, tramping over dirty tracks, piles of steel, rough wooden planks, paint and——"

"Can't I?" she said, "you just see."

"Really haven't you got anything for rough work that you could put on?"

"I have a walking suit."

"That would do."

"But it would take me half an hour to get out of this and into it and——"

"I hate to see you spoil your dress," he said uncertainly as she stopped.

Really what gown on earth was worth half an hour of her society? At least that is the way he felt about it, and evidently she felt the same way.

"It is settled, then," she said, slipping her arm through his as they walked down the long wooden platform near the siding. "You know," she continued, feeling herself obliged to speak since he was so portentously silent—ordinarily he was a fluent and ready man but something had got hold of him now and he was as shy and speechless as a boy—"You know," she went on, "I have heard so much about that bridge and how wonderful it is by moonlight that I rather felt that I ought to dress the part when I came to inspect it under such auspices."

"What about me?" he asked.

"You are dressed in the part, too," she continued, "yours is the strength and the power and masculinity of the bridge——"

"While you are its grace and beauty," he concluded as she hesitated.

"I didn't like to say it myself and I won't admit it it is true, but——"

"You don't have to admit it," he said quickly. "In this half light you look as mystic and ethereal as——"

"And how do I look in the whole light, pray?"

"A trifle more substantial but not less beautiful and winning," was the prompt answer.

Really for a timid man, with women, he was doing very well he thought, and so did she.

"Do you prefer the ethereal woman, the dependent woman of the mid-Victorian period to her self-sufficient descendant of the present day?"

"I like a woman to be all things not to all men, but to me, at different times"—he ran the whole gamut of feminine possibilities in his desires, it seemed!—"There are times when the clinging mid-Victorian 'female' is the sweetest thing on earth to a man and there are times when the woman who can march shoulder to shoulder with you is the one woman you desire. Tears, laughter, submission, mastery—a man wants a woman in all her possible moods," he concluded oracularly.

"You want a great many things, it seems to me," she retorted mockingly.

"Yes, but only one woman."

"Well, you want her to be a great many things, then."

"I just want her to be herself."

Now Meade was perilously near that point when he would describe his love if he ventured to discuss it further in the words trite but true, "I love you because you're you!" That is what he meant anyway, and incidentally although our sense of humor even in our tenderest moments may spare us from the banality of the exact words, it is what all think and most say in one way or another under such circumstances.

"I hope some day you will meet this imaginary creature of infinite variety," said the woman softly.

"I hope so," was the somewhat surprising answer, at which she was not a little chagrined.

"You know you men have so many advantages over poor womankind, you are free to go everywhere and pick and choose," she went on, carefully concealing her discomfiture.

"To tell the truth, I have met the woman," the man admitted.

"Where, in Burma?"

"In America."

"America is a great country and there are a hundred million people in it, possibly half of them my sex."

"Your statistics are sadly in error."

"They are the latest, I believe."

"The latest in this instance are wrong. The population of America, as I see it, is only one."

This was direct and unequivocal. He was gaining courage, fast mastering his timidity. She was by way of being swept off her feet, so that woman-like she temporized. She changed the subject although it was the subject nearest her heart and the one she most wished to discuss; to wit, herself, in relation to him.

They had now reached the end of the platform in their slow progress, and as they turned about the temporary station and storehouse before them rose the bridge. The moon larger and more magnificent than she had ever been before to either of them—for when, since God set the night lights in the firmament, had there ever been an evening like that?—was rising over the

high hills that sprang up from the steep cliff-like bank of the other side of the vast river. They saw her round red full face through an interlacing tracery of steel. The lower part of the bridge was still in deep shadow. Indeed the moon had just cleared the hills of the opposite bank of the great gorge cut by the broad river flowing swiftly in its darkness far below.

The base of the truss was yet almost invisible and the effect of the peak of the pyramid of steel brilliantly gilded by the high light and rising out of dark nothing was as wonderful as the picture of a mountain top glowing in the setting sun while all the valley is sunk in the ever deepening shadows. At the further end of the suspended arm extending far over the water the top of the traveler glistened in exactly the same way. The cantilever on the opposite shore, incomplete and sunk under a high rise of land, was still in shadow and not yet discernible.

Instinctively the two people stopped and gazed out and up and across. Unwittingly the woman drew a little near the man. He became more conscious than before of the light touch of her hand upon his arm. It was very still where they stood. The shacks of the workmen had been erected below the bridge about a quarter of a mile to the right along the banks of the little affluent of the main stream. They could hear faint but indistinguishable noises that yet indicated humanity coming from that direction. The fires in the machine house and in the engines were banked. Lazy curls of smoke rose to be blown away in the limitless areas of the upper air. In the darkness all the unsightly evidences of construction work were hidden.

"Oh," said the woman, drawing a long breath, "I don't wonder that you love it. Isn't it beautiful, flung up in the air that way? One would think it wasn't steel but silver and gold and——"

"Time was," said the man, "when I loved a thing like that above everything except my father, but now——"

In spite of herself the woman looked at him.

"But now?" she whispered as he hesitated, and then she turned her head half fearful of his answer.

"I am almost afraid to say it," he said, lowering his voice to match her own.

"A soldier of steel," she said, "and afraid!"

"Well then, all that was the second now takes the third place."

"And before your father comes?"

But she did not give him time to answer. Atalanta cast the golden apples before Hippomenes, but she delayed her pace while he picked them up. This girl would and would not. She threw her golden personality in his face, and when he reached for it she glided ahead again.

"Come," she said, "let us go out on the bridge."

"It looks beautiful," said the man, "like most things in the moonlight, but——"

"Even women?"

He nodded his head.

"But appearances are deceptive," he went on. "It's a rough place for you. Those little slippers you wear——"

He looked down and as if in obedience to his glance she outthrust her foot from her gown. It was not the

smallest foot that ever upbore a woman. Quite the contrary. Which is not saying it was too large, not at all. It was just right for her height and figure, and its shape and shoe left nothing to be desired.

"Never mind the slippers," she said, "they are stronger than they look. They'll serve."

"But the distance between here and the bridge is inches deep in dust."

"Dust!" she exclaimed in dismay. "I don't mind rough walking, but dust——"

"I never thought of that," admitted the man. "The fact is I have thought of nothing but you since I saw you, but now we'll have to go back or——"

"I shall not go back," she answered firmly.

"Well then, there is no help for it, pardon me."

He stepped down off the platform and before she knew what he would be at he lifted her straight up in his arms. He did not carry her like a baby, he held her erect, crushed against his breast and before she had time to utter a protest, or even to say a word, he started through the dusty roadway toward the bridge-head.

It was a strange position. There was nothing that she could do. He clasped her with a grip of iron, too tightly for her comfort, indeed, but the pressure he put upon her was due entirely to his own nervousness. She could not kick. She could not even move. Really she did not wish to. It was respectful enough even if a little absurd. What he was doing was so obviously the proper thing to spare her dainty slippers and silk stockings and other finery. And, if it were not, she could not help liking it. She knew she ought to protest, but the words did not come. While she was trying to

think them up they had crossed the little desert that intervened between the portal of the bridge and the end of the platform. Then he set her down gently. She felt her feet strike solid plank and she was distinctly sorry that the journey was ended, the crossing had been made.

Another woman might have reproved him then, just as another woman might have screamed or tried to kick or beaten him over the head *en route.* Her arms had been free, but she had attempted none of these things. Perhaps love, perhaps a sense of humor, or both had saved her. He was glad to recognize the difference between her and the ordinary member of the sex. It flattered his discrimination that she had accepted so coolly and quietly, outwardly at least, his services as a matter of course.

"Thank you," she said simply, "that was very nice of you. You are wonderfully strong."

Now a man's bodily strength is something for which in a large measure he has no responsibility, for which he can claim no merit, but there is no subtler form of flattery that a woman may offer a man than to praise him for physical prowess. He feels much more satisfaction in being told that he has a strong arm than in having it pointed out that he carries a great brain, and Meade was pleased beyond measure.

"It's nothing," he said, which was scarcely true, because it was the greatest thing that had ever happened to him so far. "Those shoes of yours will be ruined on this planking, but at least there is little dust. If my feet were not so enormous I——"

Helen Illingworth laughed outright at the idea.

"My own shoes will have to do me and if they are ruined I can get another pair or a dozen."

"Bad lookout for your husband, if he happens to be a poor man."

"Oh, I wouldn't spend my husband's money as I do my father's," laughed the young woman with that indifference to father's money which is characteristic of the relationship, the age, and the sex.

"Could you be happy with a man who couldn't give you dresses like this and slippers and——"

"If I loved him I could be happy with him in rags," was the reckless answer.

They were now walking down the track on the floor of the approach-span of the bridge. There were two railroad tracks running out across the bridge to the end over the river, and the space between the rails was covered with rough planking. The man on guard at the entrance recognized the engineer and, with a word of greeting, the two adventurers passed him and marched down the track. They had now reached the anchor arm of the cantilever proper. On either side of them rose the ribs of the huge diamond-shaped truss, one point resting on the vast shoe on the pier and the other point, both the center and focus of the radiating arms of steel, far above their heads.

The moon, by this time, had passed the floor level and the cross bracing cast a network of shadows over them, upon track and floor beams and stringers. The silence of the half-light, the mystery of it all oppressed them a little. It was with beating hearts that they pressed on.

V

FALL AND REVELATION

"IT'S rather confused in here," said the man, "but we will soon get out toward the end and then the view is magnificent. You can see up and down the river for miles and the night boat will be along in a few minutes."

"Isn't that it?" asked the woman, pointing up the river to where a cluster of lights rounded a huge bend not far away, and swung out in midstream.

"Yes," said the man, "if we listen I think we can hear her."

They both stopped, and sure enough faintly across the water came the noise of the clanking paddles of the big river steamer. With that sound also mingled the song of the night wind, for a wonder comparatively gentle, making strange, weird harmonies as it sifted through the taut and rigid bars of steel. She listened enchanted with the sound.

The big floor beams extended from one side to the other of the bridge, between the trusses at intervals of fifty feet. At right angles to them and six feet apart the stringers ran lengthways parallel to the trusses. Here and there pieces of timber false work had been thrown across the stringers for the convenience of the workmen, but as these two slowly moved toward midstream at last these pieces became fewer and finally

there was nothing to be seen but the heavy floor beams and the lighter stringers.

After they passed the top of the pier and got beyond the small space of river bank on which the pier was set, there was nothing between them and the water, now moonlit and quivering, except these cross girders of steel on either hand beyond the planking in the tracks.

"Have you a clear head?" asked the man. "I mean does it affect you to be on high elevations? Do you get dizzy?"

"I never have," was the answer, "but——"

"I think I'll hold you," was the reply.

He grasped her firmly by the arm. The loose wrap she was wearing over her shoulders did not cover her arms and it was a bare arm that he took in his hand.

"I beg your pardon," he said quickly, "but——"

"It doesn't matter. I understand. You would better hold me, I might slip."

She was in fact as clear-headed as any woman on earth. She had stood alone and unsupported on the brink of precipices a thousand feet high, yet her heart had not beaten then as it was beating now and she had never felt the need of support before. There was something electric and compelling in the pressure of his strong hand upon the firm flesh of her round arm. She shrank closer to him, again unthinkingly, by a natural impulse.

The moon was now well clear of the brow of the highest hill. Its yellow was turning to silver and in its cold and beautiful illumination the whole river flowed bright beneath them. Every inch of the bridge was now clearly revealed in the white passionless light.

Their progress was now checked by a flat car, fortunately partially unloaded, which had been left on the track before them when the men knocked off work. They would complete its unloading in the morning. If Meade had been alone he would have crossed on one of the floor beams to the other track, but that was not to be thought of in the case of Helen Illingworth.

"Too bad," he said in deep disappointment, "I suppose we shall have to go back. I'll rout out one of the engine-drivers and get him to pull this car out of the way——"

"Can't you climb that car?"

"Certainly I can."

"Well, so can I if you help me."

"I'll help you this way," said Meade, having acquired a certain facility from his previous performance, as he lifted her up to the low platform of the truck, lower by the way than the level of an ordinary railroad car. Placing his hand upon it he vaulted to her side. They walked across it quickly, choosing the side that had been unloaded of its burden of iron for their path.

"Wait," said Meade as they reached its end.

He sprang down to the track and as she leaned forward he lifted her down also. Fifty feet away the bridge ended in the air. They were now almost directly beneath the traveler near the end of the suspended span. Its huge legs sprawled out like those of a gigantic animal on the extreme edges of the bridge on either side above their heads. The wooden platform on the track ran out half the distance to the bridge end. Slowly the two walked along it until but a few feet was left between them and the naked floor beams and the

stringers carrying the ties to which the rails were bolted and the planks laid.

By the side of the track on the top of the stringers had been placed a pile of material surmounted by a large flat plate of steel which lay level upon it. It was triangular in shape, the blunt point turned inward. The base which was about six feet wide paralleled the course of the river. The plate on the top of the pile was raised about three feet above the level of the track. They stopped abreast of it.

"Can't we go any further?" asked the girl in low tones, still close to the young man, who still tightly clasped her arm.

It was a night and time in which to speak softly. Yet a whisper would not serve. Indeed there was always wind in the gorge and out there on the end of the bridge. It might be never so still on the shore but there was always a current of air where they were and it seemed to be coming stronger. The sound of it overhead was louder, and less pleasing. There was a threat in its notes as it swept through the steel. Her dress was whipped about her by its force. The drapery which she wore about her shoulders blew against him. She drew it around her with her free hand and looked at him for her answer.

"I'm afraid it wouldn't be safe to go any further," he said.

"But I must, I want to see the steamer."

"It will pass directly under the bridge."

"But this wooden platform will hide it, this and the pile of steel here."

"They have no business to pass under the bridge,"

said Meade. "They've been warned hundreds of times and orders have been issued."

"Why?"

"There is always danger that something might fall."

"At night with no one working?"

"Yes, even at night. We are never quite sure that everything has been made secure until we examine it. A bolt or a nut or a bar of steel or a tool, to say nothing of a beam, falling from such a height would kill anyone and the beam might sink the steamer, but they still come as near as they like. The passengers seem to wish it and the captains humor them. Besides the best water and the least current to fight against seem to be just under the bridge end yonder."

"Can't we go just a few steps nearer?"

"I would not have anything happen to you for the bridge itself and all the rest of the world."

"You couldn't say more than that, could you?"

"I could say much more than that if I——"

But she interrupted him again.

"Why can't I stand up there?"

"On that gusset plate?"

"Is that what you call it?"

"Yes, it bears the same relation to structural steel that a gusset does to a woman's dress. I don't suppose you know how to make a dress?"

"Do I not? You don't know that I have done some settlement work, do you?"

"No, but I am not surprised to find that you have done anything good and useful and beautiful."

"Well, it's hardly that last, but as it happens I could make a dress if——"

"If what?"

"If I were a poor man's wife and had to."

She laughed a little nervously.

"A dress like the one you are wearing?" he asked.

"Hardly that," she laughed again. "It took an artist to do that, and I would not want one like it in that case. I am only at best a plain sewer."

"Plain!" persisted he fatuously.

"Exactly. But can't I stand on that?"

"Wait," he answered.

He climbed to the center of it, lifted himself up and down on his feet to test it and found it solid apparently.

"I think so," he said at last, "but I shall have to put you up."

"Am I never to be allowed to climb anything myself?" she asked as he lifted her up and set her down on her feet in the middle of the plate of steel as gently as before.

"Not when I am by to help you," was his reply.

"Perhaps you do not know that I am one of the few women who have done some real mountain climbing?"

"I don't know anything at all about you except that I——"

"Oh, there comes the steamer," she cried. "I can see it beautifully from here."

"Be careful," was his answer, "you must not move. Stand perfectly steady. I am not so sure of that plate. Indeed, if you will permit me——"

He reached over from where he stood on the track below her and by her side and gathered the material of her dress into what could only be described as a bunch, which he held in an iron grasp.

"I do not think that is necessary," she said. "This plate seems as solid as the rest of the bridge and—oh, there's the steamer! She's right under us."

The big river craft was filled with light and laughter. The wind fortunately blew the smoke away from the bridge so that they had a clear and perfect view of her. There was a band playing aboard her. They heard the music above the beat of the whirling paddles, the song of the rising wind. The passengers were congregated about the rails on the upper decks staring upward. The bridge was as fascinating to them as it was to the people ashore evidently.

"How interesting," said the delighted girl. "Why don't you come up here yourself, you can see so much better?"

The man dropped her gown, lifted his right foot to the pile on the stringers to follow her suggestion. Thoughtlessly she stepped toward the outer end to give him room, quite forgetful of his caution. The gusset plate was not so securely bedded on that uneven pile as either of them had fancied. Before he could complete his step or warn her of the danger, it now bent forward. It tilted distinctly. In spite of herself, Helen Illingworth was carried still farther forward as in her excitement she sought to regain her balance and that disturbed the unstable equilibrium of the piece of steel still more. It began to slip downward, grating on the pile of beams as it moved; another second and it would be off and on its way irrevocably.

Meade threw himself at the girl. He lunged out and caught her just as she was slipping downward with the plate now almost perpendicular. To catch her

he had to step to the very edge of the planking beyond which the rails ran naked on the ties.

With a tremendous effort he caught her by the waist and swung her up and in and backward. Fortunately the hypothenuse of the plate ran away from the pier or it might have swept her down in spite of all he could do. As it was he caught her furiously to his breast and stood fast on the brink quivering, heaving himself desperately backward as he sought to maintain his balance and take the backward step that meant safety.

Neither of them had said a word. A wild shout rose from the steamer as the huge plate dropped, like the blade of a mighty guillotine, straight down through the air. The floor plane of the bridge was two hundred feet above the water. The heavy piece of steel, weighing hundreds of pounds, was traveling with the velocity of a lightning flash when it neared the water. If it had struck the boat it would have cut it through like a knife. Fortunately it cleared the gangway by inches. In a second or more it had disappeared. Screams, shouts, arose from the boat which promptly sheered off into midstream.

Helen Illingworth's back had been toward Meade as he seized her. She had seen as he had everything that happened. Recovering himself at last he stepped back slowly, almost dragging her, until they were a safe distance from the edge.

"My God," he said hoarsely. "What a narrow escape."

"For the boat?"

"What do I care for the boat?"

"For me?"

"I thought you were gone."

"And so I should have been if you had not been there."

"If you had gone down I should have followed you, I swear."

His face was ghastly white in the moonlight. Sweat covered his forehead. He was shaking like a wind-blown leaf both on account of the strain of his sudden and terrific effort, and because of the reaction from the horror that had overwhelmed him as he saw her sliding.

"The whole world went black when I saw you go," he said slowly.

"Do you care that much?" asked the girl, trembling herself.

There was no necessity for maidenly reticence now.

"Care?" said the man, "care?"

"I'm all right now."

"You are more fortunate than I. I stood to lose you, you stood to lose only life. Don't you see? Can't you understand? My God!"

Suddenly he swept her to his breast as this time she faced him. She was very near him and she did not make the slightest resistance. It was the fourth time he had taken her in his arms that night, but this time there was all the difference in the world.

She had waited for this hour and she was glad. They had faced death too nearly for any hesitation now. She knew from what he had said to her that he loved her, and although he had not referred to it in any way she also knew that he had so superbly and magnificently saved her at the imminent risk of his own life. There had been swift yet eternal moments when it seemed that

both of them, trembling on the brink, would follow the downward rush of the gusset plate. Now as he strained her to him, she lifted her face to him, glad that she was tall enough for him to kiss her with so slight a bend of the head.

There, under the great trusses of steel, amid the huge, gaunt, massive evidences of the power, of the might, of the mastery of man, two hearts spoke to each other in the silence, and told the story that was old before the first smelter had ever turned the first ore into the first bit of iron, before Tubal Cain ever smote the anvil; the story of love that began with creation, that will outlast all the iron in all the hills of the earth —that is as eternal as it is divine!

VI

THEY CROSS THE BRIDGE TOGETHER

ORDINARILY Meade's head was as clear as the air of a mountain top, his nerves as steady as the steel of the great bridge, but that night after the shock he had sustained he was almost afraid to attempt to return to the shore along the planks laid between the rails. No experience that he had ever gone through had so completely unnerved him. It was then the woman who played the man's part. As he said, all she had faced was loss of life; that was a simple thing in his mind compared to the loss of her; extravagant, foolish, if you will, but true.

He blamed himself, too, for having allowed her to climb up on that gusset plate. To be sure he had tested it, but, as the event proved, he had not tested it as thoroughly as he should. Indeed, the fact that the most precious thing on earth to him, the being he loved above all else together, had been nearly killed through his lack of care, his failure absolutely to make sure, smote him terribly. He strove, at first vainly, to control himself, but presently by the exercise of as iron a constraint as was ever imposed on nerves by the will of man, he succeeded in attaining some degree of composure.

After that wild embrace, that first rapturous meeting of lips, he had released her slightly, though he still held

her closely and she had been quite content to be so arm-encircled and await his further pleasure.

"I'm quite calm, now," he began, "that is, I have mastered that awful horror and the nervous shock that came upon me when I saw you sliding away, and I am as composed as any man could be who is holding you in his arms."

"It's all over now, there is nothing to reproach yourself with. I am safe, thanks to you. I should not have ventured, anyway."

"Yes, but if it had not been for me you would never have been in danger. It was my fault. I should have made sure. I shall never forgive myself."

"But I forgive you gladly because I shall never forget that if I had not been in danger I might not now be here in your arms."

"Oh," exclaimed the man, "how sweetly you put it—nevertheless——"

"And if I were not here," she went on swiftly, too happy in her love to be mindful of anything else, "I certainly would not be doing—this."

And of her own motion she kissed him in the moonlight.

"And if you were not doing this," said he, making the proper return, "I might not have had the courage to tell you."

"You haven't told me anything—in words," she answered, fain to hear from his lips what she well knew from the beating of his heart.

"It's not too late then to tell you that I love you, that I am yours. To give myself to you seems to be the highest possibility in life, if you will only take me."

"And do you love me more than the bridge?"

"More than all the bridges in the world, past, present and to come; more than anything or anybody. I tell you I never knew what love was or what life was until I saw you sliding to your death."

Sometimes only death opens the eyes to the meaning of life.

"I'm glad I fell just as far as I did."

"One foot more and you would have been in the river."

"As it was I stopped just at the level of your heart."

"Yes, thank God."

"And your own quickness and noble strength."

"I thought I was too late when we trembled on yonder verge."

"Do you know you actually hurt me when you swept me so roughly to you, not but that there are some pains that surpass all joys."

"There was no time for gentle measures."

"I know, and I knew I was safe when you caught me. Somehow I expected you would do it. I knew that you would not let me fall."

"If I had not succeeded I should have followed you."

"I felt that, too," she answered dreamily.

"We must go back, dearest," he said at last, "I am so fearful for you even now that I am almost unwilling to try it. Every time I glance down through these interspaces between the stringers my blood runs cold."

"You supported me before; I will support you now," laughed the woman.

"No," said the man, "we will go together."

They turned toward the shore. He took her hand and slipped his other arm about her just as simply and naturally as if they had been any humble lover and his lass in the countryside.

"No place on earth will ever be what this bridge is to me," said the woman. "I knew you loved me, of course, at least I hoped so; at any rate I knew that I loved you——"

"I never dared dream that you could."

"But here the words were first spoken, here you first took me to your heart, here you kissed me first." She stopped and he with her, she flung her free hand up in the air. The moonlight fell softly upon her sweetly rounded arm. "Oh, beautiful bridge, oh, exquisite creation of stone and steel, you have given my lover to me. The wind will never blow through you, the moon will never shine upon you without recalling that," she cried rapturously. She waited a moment while his heart whispered amen. "Let us go," she said reluctantly enough, loath to leave the place where death had stretched out his hand and love held him back.

"One more kiss," he pleaded, "and then——"

By and by they got to the end of the bridge.

"I shall carry you across the dust once again," he said as they passed out of sight of the watchman, who had seen the falling plate and heard it splash into the river; but being a discreet man and realizing that the engineer and the woman were safe he had made no outcry. Meade thereafter properly rewarded him for his discretion.

This time he held her differently. This time she

slipped her arm about his neck and laid her head upon his breast and he carried her as he might have carried a child. When he set her down on the station platform, now quite deserted, they both discovered first that she had lost the light wrap that had shrouded her bare shoulders and next that in the violence with which he had seized her as she fell, the skirt of her dress, which had caught on a piece of steel, had been rent and torn. It did not affect her appearance, in fact in that moonlight, she looked positively heavenly to him at least.

Far down the platform they could see the lights of the car.

"Listen," she said as they walked slowly along. "You must not tell father anything about this little accident."

"I obey, but why not?"

"It would only worry him, and it was my fault."

"No, mine."

"I will not hear you say it."

"But I must speak to your father about——"

"And the sooner the better; he is in good humor with you and the bridge now. I have heard him speak well of you. He is intensely American and he has never been anxious to have me marry any foreign title, or even the fortune hunters of our own country who have wooed me. I believe he will be glad to give me to you."

"And if not?"

"I should hate to grieve my father, but——"

She turned and looked at him in the moonlight, her glorious golden head, her neck, her shoulders, her arms bare and beautiful in the celestial illumination which

gave to the warm flesh a touch of coldness, and mingled purity with the passion she inspired and exhibited which made it almost holy in both their hearts.

He seized her hand and lifted it to his lips as a devotee, and she understood the reason for the little touch of old-world formality and reserve, when nought but his will prevented him from taking her to his heart and making her lips, her eyes, her face, his own.

"Now may God deal with me as I deal with you," he said fervently, "if I ever fail at least to try with all my heart and soul and strength to measure up to your sweetness and light."

"My prayer for myself, too," she whispered.

"You need it not."

"You must wait here," she said, deeply touched, as they had now reached the steps of the car, "until I have changed my dress; father would notice, anybody would, that tear. When I have finished I will come back to you and then we will seek him and tell him."

Accordingly Meade stood obediently waiting outside the car in the shadow it cast. There was no one about. The servants had gone to bed. The porter of the car was nodding in his quarters waiting for the time to turn out the lights. The engineer had the long platform all to himself. After a time he chose to walk quietly up and down, thinking. The future looked very fair to him. To be sure he had nearly lost the woman he loved in the river, and it had been his fault. He overlooked the fact that she had disregarded his caution and stepped forward. But after all she had not fallen. He had caught her on the very brink. He could remember, he never would forget, those seconds, like

hours, when he stood trembling, even swaying, upon the very edge of the bridge, with practically nothing but his precarious foothold between the two of them and the awful plunge into the river two hundred feet below. He could not think how he managed to retain his balance and draw her back with him, away from that perilous standing place; but he had done so and the result had been the confession which he had dared to make and to which she had vouchsafed that blessed return.

If only her father could see in him any fitness to be trusted with so priceless a treasure all would be well. Meade had never made a failure in his life, except in small ways which had only been of sufficient importance to teach him to cope with greater difficulties. His career had been practically one unbroken success. He had acquired a remarkably fine reputation for so young a man in his profession and he had gained it, not only because of his father's great eminence, but in spite of it; for the paternal renown had been something of a handicap in that he had at least been compelled to live up to it.

There are few tasks so hard as living up to a reputation, unless it is living one down. He was about to fall heir to such of his father's business and prestige as the one could transfer and the other take up. The great bridge was rising grandly and even he would share in the fame that it would bring to its designer. His forebodings had been unwarranted, his father's reasoning abundantly justified. He was glad. The woman he loved returned his affection. When she might have had anyone in the world she took—him! If only her father——

VII

THE COLONEL MAKES CONDITIONS

"BERT," a sweet voice came to him out of the darkness, and the first familiar sound of his name from her lips confirmed all that had passed which, as he had waited, he almost had felt he had dreamed.

He turned to discover her standing in the door of the car dressed as she should have been for such an excursion had she at first followed her father's wise suggestion. His heart thrilled to the use of the familiar name. With a sort of boyish shyness he made answer in kind.

"Helen," he said, "shall I come up there?"

"I'm coming down to you."

Now whether she was afflicted with sudden weakness or he with sudden fear, it was quite apparent, had anyone been by to see, that no longer could she descend from car step to platform without much careful assistance; also she had to pay toll before he let her pass. There was no unwillingness in either case. Hand-in-hand they walked to the rear of the car, where the observation platform was still brightly lighted.

Abbott had gone and the other three men were on their feet. They were about to separate for the night, although it was still rather early.

"Father," said his daughter out of the darkness.

"Oh, you're there," answered the Colonel. "I won-

dered when you were coming back. I was just thinking of going to fetch you. Is Mr. Meade——?"

"I'm here, sir."

"Good-night, gentlemen," said the Colonel as the others turned away, leaving him alone on the platform.

He came to the edge and leaned over the brass railing.

"Are you two going to make a night of it?" he asked jocosely.

"Colonel Illingworth," began Meade.

"Father," said his daughter at the same time, "we have something to say to you."

"Umph," said the Colonel, staring down at them narrowly as they stepped into the full light from the dome of the platform. "Something to say to me, eh?"

"Yes."

The old man's face fell a little as every father's face falls when his daughter and the man obviously in love with her make that statement.

"Well, say it and be done with it," he continued, clamping his teeth on his cigar a trifle nervously.

"We can't say it with you there and we here. Come down, and——"

Colonel Illingworth opened the gate, lifted the platform, and descended the steps.

"Here I am," he said as he stopped by the two.

His daughter took him by the arm and they walked down the platform so as to be out of any possible hearing from the car.

"Now," she said to Meade, who followed her.

His heart was beating almost as rapidly as it had on the bridge and for exactly the same reason—fear of losing her. He tried to speak.

"Well, young man?" said Illingworth, flicking the ashes from his cigar and wishing to get it over, "you said you had something to say to me."

"Yes, sir, I have."

"Why don't you say it, then?"

"It's a very hard thing to say, sir." He looked helplessly at the girl, but she was speechless. It was his task. If she were not worth asking for she was not worth having, she might have said. "Well, sir," he began desperately, "I love your daughter, Helen. I want to marry her."

"Umph," said the Colonel again, "I supposed as much. How long have you and Helen known each other?"

"Over a year, sir, but I loved her from the very moment I saw her. I did not dare hope, I didn't dream, I never imagined, and strange as it may seem, sir, she —seems to love me."

"Seems?" exclaimed the girl softly.

"Wait, Helen," said her father, "this is a matter for me and Mr. Meade."

"And am I to have nothing to say?"

"It strikes me that you have probably had your say already."

"Yes, on the bridge," burst forth the engineer.

"Ah, on the bridge! I see. Are you sure she loves you enough to be your wife?"

"I—you see—er—a——"

"Of course I do," said Helen, realizing that it was now high time for her to come to the rescue of her lover, "and so would any other woman."

"You know, of course, that while I am not rich, I

am not poor and I can support my wife in every comfort, sir," urged the man, greatly relieved by the woman's prompt avowal.

"She'll need a few luxuries besides, I'm thinking."

"Yes, of course, sir, I'll see that she gets them. This bridge is going to make us all famous and I shall have my father's influence and——"

"When the bridge is finished," said the Colonel decisively, "come to me and you shall have my daughter."

"Oh, father, the bridge won't be finished for——" began the girl.

"I accept your terms gladly," said the man, realizing that in any event they would have to wait for the bridge. "It's in the contract that we are to deliver it complete before the first of November."

"And that's not far off," Colonel Illingworth reminded his daughter.

"If it is left to me, sir, and I can stir up Abbott, we will be ahead of the contract date," said Meade.

"You understand, of course, that there is to be no public announcement of the engagement until the bridge is finished," the older man said emphatically.

"I understand, sir," answered the engineer, too happy at her father's consent to make any difficulties over any reasonable conditions he might impose. "Yes, Helen, it's all right, your father is right. This job's got to be done before I——"

"Don't say before you tackle another," protested the girl, half disappointed, and yet seeing the reasonableness of both men, while the Colonel laughed grimly.

"That's about the size of it," said the old man, "no

matter how you put it. One thing at a time. Meade has this bridge on his soul, and he ought to have it, and although he may have you on his heart he must forget that until the bridge is completed and then—well, Meade, you'll be coming into our employ and I don't know anybody on earth I would rather have for my son-in-law than a clean, honest, able American with a record like yours. A man who can look me in the eye and grasp me by the hand, like this."

He put out his hand as he spoke. Meade's own palm met it and the two men shook hands unemotionally but firmly after the manner of the self-restrained practical American, who is always fearful of a scene and does not wear his heart upon his sleeve. The Colonel threw away his cigar, slipped his arm around his daughter's waist, kissed her softly on the forehead.

"I hate to lose you, Helen. I hate to give you up to anyone. We have been very happy together since your mother died, leaving you a little girl to me; but it had to come, I suppose, and perhaps I shall be glad in the end. Good-night, Meade. You will be coming in presently, Helen?"

He turned and walked away as they answered him. They watched him go slowly with bended head. They watched him climb, rather heavily, up the steps of the car—that he was an old man seemed rather suddenly borne in upon them. He stood for a moment in the light smiling, remembering, and then turned and marched within the car. He switched the light out as he passed down the corridor.

"Wasn't he splendid?" said Helen, when she had time to breathe and freedom to speak.

"One of the finest old men on earth," continued Meade. "He and father would make a great team and——"

"You and I another," she said quickly.

"If I could only live up to you there wouldn't be a pair since Adam and Eve like us."

"But it's so long to wait for the bridge. I hate to have my fate bound up in iron and steel."

"It will be ages," said the man, "and yet your father is right. My father and I have undertaken to put this bridge across and we have to do it. Our honor is pledged. I'll think more of that bridge now since its completion means you. And every blow of riveter or hammer, every grinding of steel on steel, every creak of winches, will say to me, '*Hurry up, old man, hurry up; your girl is waiting for you when the great spans are completed and the river is crossed.*' What an inspiration that will be for me."

"I was interested in the bridge, before," said the woman, "but think how I shall watch it now. You must write me every day and tell me every inch that you have gained."

"Trust me, I'll measure it in millimeters."

"And now, sweet love, good-night," she whispered.

"I shall see you in the morning?"

"If father attempts to run this train away without letting me see you again he will have to leave me behind," she laughed as she looked back at him through the door.

Meade did not want to leave the car. He would fain stand on the platform near it all night long. It was completely dark except for her stateroom, where

trickles of light came from around the close-drawn curtains. He did wait until that room was dark also before he went to his shack, which was built on the high land so that it faced the bridge. He could see it from the window. He lay there watching it, that bridge in which was bound up his love, his life, his fortune.

VIII

THE LOVERS MAKE PICTURES ON PAPER AND HEART

THE next morning bright and early—adjectives that refer not only to the morning, but to the man and, as we shall see, to the woman—Meade hurried down the platform he had traversed late and slowly because he was leaving her the night before. The men were not yet called to work, they had not had their breakfasts even. The sun had just risen. He did not expect to see anyone at that hour at the private car toward which he stepped softly, he just wanted to be there so he could be near the woman whom, in spite of the fact that they were separated by the steel and glass walls of the car, he still could feel in his arms.

We all know the proverb about the early bird and the worm. It seems almost ungallant even to think it in this instance, but Bertram Meade certainly caught Helen Illingworth because he was on hand at the break of day. She too had been moved to early rising, for as he stopped abreast of the car she came from the door and stood surprised and, like Aurora, rosy with the dawn, especially in cheeks, if an adjective so common as rosy may be applied to the flush of color that flamed beneath her sensitive skin as she saw him and came down to him.

He had not expected to see her and she had not

expected to see him, and it was necessary for both of them to make elaborate explanations each to the other of this indubitable fact. Explanations are said to be dangerous; not, however, is that true when they are sandwiched between kisses. If you rise early enough, that is before anybody else, you may kiss unobserved by the world; and if you do it softly, even while you stand under the open window of a car behind the curtain of which a father nods, you may do it with impunity.

When a brief period of sanity ensued—"I came out to see the bridge," said the girl.

"I had a sweeter object in view than any structures of stone and steel."

"Knowing man as I do, I infer——" began the woman archly.

"Your deductive powers, like yourself, are beyond praise," he interrupted.

"Some lady in the field?" she concluded.

"In the car."

"But you couldn't see me," she began, with dismay well assumed.

"In my mind's eye I can see nothing else, not even the bridge. When I look at that bridge the sound of your voice speaks to me in every whisper of the wind through the steel. I can hear the swish of the silk of your dress, the grind of the slipping gusset as I did last night. I can recall the beating of your heart as I caught you and we stood rocking on the very edge. It would not have been such a bad death after all," he continued, "for we would have gone down together and the last beat of each heart would have been against the last beat of the other."

The woman looked at him. The gay badinage with which they had begun suddenly seemed inappropriate.

"It's better to live together," she said softly, "even than to die together."

"Yes, of course. But I am not sure of——"

"Me?"

"Of myself. I don't see how such happiness can come to me. I've done nothing to deserve it."

"You're making the bridge."

"A man might make a million bridges and not be worthy of one woman like you."

"I told you last night that to hear you say that, even though it is not true and I know it isn't——" she went on, stopping his protest with her hand lightly touching his lips.

"I didn't make it half strong enough," he interposed, kissing her fingers.

"It was worth all the risk and I don't know why you have any fears. I belong to you now. If it hadn't been for you I shouldn't have been here at all. My life is yours by right of conquest."

"Only for that?" cried the man.

"And by my heart's gift as well," she added softly.

"Oh," said Meade, "I can't understand it. It's beyond me."

He looked at her, fresh, white, sweet, cool, lovely, and then at himself, rough, rugged, stark, strong. Now Helen Illingworth was not fragile or delicate, but one of the charms of woman is that if she wills she can easily look that which she is not, on occasion. He knew that she was a strong, vigorous young woman, yet it pleased him to think of her then as a flower, spirituelle,

daintily dependent. She looked the part and she acted it too, because she divined his wish.

She laid her hand on his arm. The light pressure which thrilled him telegraphed dependence, abandonment, trust, through the fibers of his being to his very soul. He looked down at her hand. It was not the smallest thing on earth. It was the firm hand of the splendid woman. It fell upon his arm lightly, not with the delicate touch of the hand of little use, but with a pressure of beautiful proportion and womanly tenderness.

Yet it seemed to him smaller than he imagined a woman's hand could be and the hand with which he clasped hers appeared huge and rough indeed. And it seemed so to her, too, his hand that is, yet the qualities that he deprecated in his own hands were those that she admired. She, too, was conscious of the difference between her fleecy lightness and his severe strength.

They walked up and down the platform between the bridge and the car, her hand still on his arm. By no mental process whatsoever could one conclude that she really needed support or that he actually gave it, yet both agreed on those points. Love, like Gratiano, speaketh an infinite deal of nothing, but unlike the Venetian the conversers treasure the lightest word. They were both to live on the remembrance of the glorious trivialities, from the world's point of view, of last night and that morning. Yes, they were destined to live on those, far, far longer than they dreamed.

So pacing up and down they came at last to stop beside the car. There were signs of life about it. They passed by it to the observation platform. Meade

climbed up, opened the gate, let down the step, and helped his lady-love up. She invited him to breakfast, preparations for which were already under way. He had not thought about it and neither had she, although they were both possessed of healthy appetites, but it was an excuse for a further exchange of the limitless variety of trifles which make up the secret and beloved part of our most cherished recollections.

They sat together in the camp chairs talking and gazing their full. No ideas were ever so wonderful to her as his; nor to him, as hers. They had begun to plan their future on the completion of the bridge. They would go abroad when they were married. He had been everywhere and seen everything, and so had she, but now they would see them together. It would be quite different. Life would begin with the completion of the bridge.

A pencil and a piece of paper lay on the little table which had been left on the platform the night before. So still had been the summer night that the paper had not been disturbed by breeze or human hand. When Helen Illingworth rose to press the electric button to summon an attendant Meade picked up the scrap and—by what chance who knew, since he had not taken his eyes from her throughout the long morning, not even when she told him to look at the bridge—he glanced down at the paper. She turned to find him looking at it with wrinkled brow.

"What is this?" he asked.

"What is what?" she returned with a little jealousy, for it was the first moment of attention he had given to anything but to her.

He held it up to her. She saw a curious little sketch on the paper made with some care so as to show four huge webs of steel connected at the top and bottom by lacings of steel angles.

"It looks like part of the bridge," she announced with a glance downward.

"It is a part of the bridge," he said promptly. "It is one of the big compression members of the lower chord of the truss."

There was a little trouble in his face of which she was dimly conscious, yet it was not sufficient to call for comment.

"Mr. Abbott and Mr. Curtiss were talking about it yesterday evening. Mr. Curtiss said something about its design that I happened to overhear. One of them must have drawn it. Mr. Abbott probably. I came out on the platform just before you came to dinner. Mr. Abbott was telling Mr. Curtiss it was all right. He seemed to have some doubt. It is all right, isn't it?"

"Of course, of course," said Meade. "You know it's the member we were discussing last night."

He picked up the pencil, as is the habit of engineers, and began to sketch just as Abbott had done the night before. As he talked she bent over him.

"Why," she said, "you're making a little picture of the bridge, aren't you?"

He dropped the pencil.

"It's a habit we all have."

She picked up the paper and looked at it carefully.

"Finish it," she said, handing it back to him.

"I'll make you a fine drawing of it when I have more time."

"No, just that. It came by chance just as we came to know that we loved each other."

"Didn't you know it before?" he went on, taking the pencil and laying the paper on the table while he worked rapidly.

"I hoped. Didn't you?"

"I never dreamed that such a thing could be possible."

"And I had to fall off a bridge to make you speak, did I, incredibly stupid man?"

"You did, adorably wise woman," he laughed in glad affirmation.

"It is finished," he said as he handed the rough sketch back to her. She bent over him, looking at it carefully. With a few bold outlines and expert strokes he had drawn a different sketch above the strut Curtiss and Abbott had debated over, the outreaching cantilever with the suspended span, traveler and everything just as it stood. "There," he said, pointing with his pencil to the outer end of the floor, "that is where it happened."

She pressed it to her heart.

"I don't have to do this, it is printed there without this, but I will just keep the sketch to look at it and think of it when we are parted."

"Good-morning," said the Colonel, coming out of the door of the car.

II

C-10-R

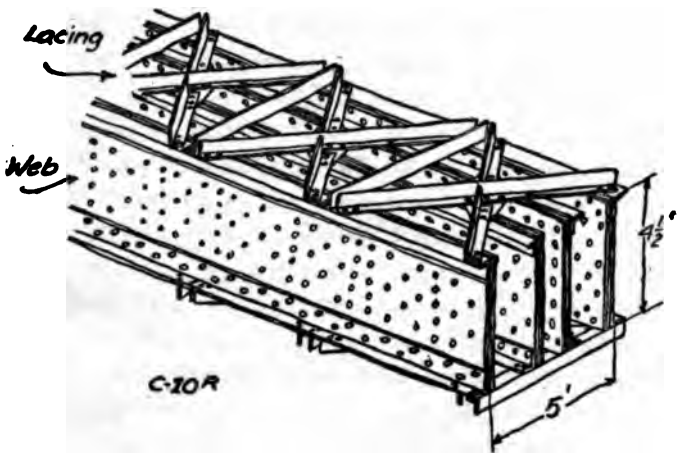
Lacing
Web
C-10R
4½"
5'

IX

THE DEFLECTION IN THE MEMBER

THREE days after the departure of the Illingworth party the young engineer fell ill, very much to his disgust. His indisposition was not serious, but it took the painful, unpleasant, and debilitating form of follicular tonsilitis, which is about the meanest small thing that can lay a strong man low.

The bridge could undoubtedly get along without him, but nevertheless he fretted over the enforced withdrawal from his constant supervision of the work. Indeed in the end he had to pay for that very fretting, for he got up too soon and went out too quickly, and was promptly forced back to bed again as a consequence of his impatience.

Now, after a week's confinement in his cabin, he felt strong enough to venture out again and to attack his problems. They were personal problems now, much more intimate than before, for he was building not only the bridge but weaving in its web of steel his own future happiness.

Of course he had been able to get out on the rough porch of the galvanized iron shack which was his own and which, as has been noted, had been so placed that he had the bridge in full view and all the operations on it, and the day before he had even walked unsteadily down to the river bank, where he had been equally sur-

prised and delighted at the progress that had been made. Abbott was a driver after his own heart. Really things seemed to have gone on just as well without him as if he had been present and, as he phrased it, on the job. He had not been lonely in his illness, for all of the chief men connected with the construction had done their best to beguile the tedium of his hours by visiting him whenever they could spare the time.

Abbott had been especially kind in his somewhat rough-and-ready way. The big construction superintendent was fond of Meade, although he held him in a little—contempt is a harsh word, disdain does not exactly express it, perhaps to say that he undervalued him would be best. Anyway, he regarded him more as a theoretical than a practical man and the inevitable antagonism between the theorist and the practical man, when they are not combined in one personality, was latent in Abbott's heart.

The building of a bridge in Burma was not the work of a practical man according to Abbott's idea. That was almost as ideal and visionary to the hard-headed veteran constructor as building one in the moon. Yet Abbott had a sneaking respect for the younger man, and more than a sneaking liking for him. Nightly, he brought to him details of the progress of the work. That evening, just before leaving, he remarked in the most casual manner in the world, as if it were a matter of little or no importance, that C-10-R was a trifle out of line.

Now C-10-R was the biggest member of the great right-hand truss on the north side of the river. It consisted of four parallel composite webs, each formed of

several plates of steel riveted together. These webs were connected across their upper and lower edges by diagonal latticing made of steel angle bars. C-10-R and its parallel companion member, C-10-L, in the left-hand truss, carried the entire weight of the cantilever span to the shoe resting on the pier. These members were sixty feet long and five feet wide. The webs were over four feet deep and in size and responsibility the great struts were the most important of the whole structure.

To say that C-10-R was out of line meant that it had buckled, or bent, or was springing, and had departed from that rigid rectangularity and parallelism which was absolutely necessary to maintain the stability and immobility of the truss and the strength of the bridge. To the theorist nothing on earth could be more terribly portentous than such a statement, if it were true. To the practical man, who, to do him justice, had never dealt with such vast structures—and he was not singular in that because the bridge was unique on account of its size—the deflection noted meant little or nothing.

"Good God!" exclaimed Meade, aflame on the instant with anxious apprehension. The night was warm and he was dressed in his pajamas and had been lying on the bed. As if he had been shocked into action he sat up, forgetful of his weakness. "Deflection!" he fairly shouted at Abbott, who regarded him with half-amused astonishment, "in the principal compression member, a camber in C-10-R?" he continued, using an old technical term for such a deviation from the straight. "Why didn't you tell me?"

By this time Meade had got his feet into his slippers and was standing erect.

"It isn't enough to make any difference," answered Abbott quickly, perhaps a little disdainfully

"It makes all the difference on earth," cried Meade. "It means the ruin of the bridge."

He reached for his jacket, hanging at the foot of the bed, and dragged it on him.

"Don't worry about it, youngster," said Abbott rather contemptuously, although he meant to be soothing. "I'm going to jack it into line and—here," he cried as Meade bolted out of the door, "you'd better not excite yourself that way. Come back to bed, man, and——"

But Meade was out of the house. It was summer and the sun had set, but the long twilight of the high latitude still lingered. There would be a moon in an hour or two, but none of its light would show for a long time; meanwhile a few of the brighter stars had appeared here and there in the graying light of the evening. Before him rose the gigantic structure of the bridge. For all its airiness it looked as substantial as the Rock of Gibraltar, and it looked even more substantial if possible, as the man, seizing a lantern and forgetting his weakness and everything, ran down beneath the overarching steel to the pierhead, climbed up to the shoe, and crawled out on the lower chord as rapidly as he could.

The genius of the father had been inherited in full measure by the son. Bertram Meade needed but one glance to see the deflection from the right line in the important member. For all his years of inexperience

he was a better trained engineer than rough-and-ready Abbott. What appeared to the latter as a slight deflection, Meade saw in its true relation. There was a variation in the center of the member of an inch and a half at least, although unnoticeable to an untrained eye. It had all come in the last week. They had extended the suspended span far out beyond the edge of the cantilever and, with the heavy traveler at the end, the downward pressure on the great lower chord members had greatly increased.

It was a terribly heavy bridge at best. It had to be to sustain so long a span, the longest in the world. And the load, continuous and increasing, had brought about this, to the layman trifling, to the engineer mighty, bend. If it bent that way under that much of a load, what would it do when the whole great span was completed and it had to carry its transitory loads of traffic beside?

Not infrequently man is sensible of the weakness of a plan although he cannot demonstrate it. *Per contra* man rests confident in a conclusion at which he has arrived, although he cannot set forth the steps to justify it. When two such different views meet it is natural that age, experience, reputation, and authority shall carry the day. Although Bertram Meade, Junior, had never been persuaded in all particulars of the soundness of his father's design, and could not be persuaded, that vast experience, that great reputation, that undoubted ability with its long record of brilliant achievement had at last silenced him. He had accepted through loyalty that which he could not accept in argument. Once accepted, he acted accordingly, heartily seconding

and carrying out the wishes of the older and, as the world would say, the abler man.

Now there is something empiric about every great engineering enterprise, but more especially if it presents a new problem. If there were not it would not be great. The work of the engineer in that event would be purely mechanical and devoid of that imaginative touch which always is a part of true greatness. Inevitably new stresses are to be provided for and no man can tell, until by the test of actual experience, whether or not he has absolutely succeeded in taking up that stress. There is no absolute certitude in empiric formulæ, because the whole range of conditions on which they are based is not known or cannot be duplicated by him who applies them.

Finally Meade concluded that, as usual, he had been wrong and the old man right, and he was glad indeed to be able to come to that decision. He was led the more easily and inevitably thereto because of a certain quality that all engineers possess, a habit of mind in which they all share. When the thing itself is before them concretely, especially if it looks to be of sufficient bigness, the invariable tendency of the engineer is to trust it despite previous calculations. It is there, it stands, it is; though it moves not it has a being; and the great monster strut, sixty feet long, seemed to him big enough and rigid enough, if placed on the fulcrum of Archimedes, to hold up and even to move the world.

The thing that smote the engineer hardest, as Abbott spoke, was that this weakness was exactly what he had foreseen and pointed out. It was the possibility of the inability of this great member to carry the stress that

young Meade had deduced by using the formula of Schmidt-Chemnitz. It was this point, and this point particularly, that he had dwelt upon with his father and which they had argued to a finish. So strongly had he been impressed with the possible structural weakness of this member that he had put himself on record in writing to his father. The letter he had written had been destroyed, so he had been informed, but he remembered it perfectly. The old man had overborne him and now the little curve, one and a half to one and three-quarter inches in sixty feet, established the accuracy of his unheeded contention.

Although he could find no fault with his calculations he had decided he must have failed in some way, since he could not convince his father; and, in the face of the great experience and ability and the serene confidence of the old engineer, he had finally yielded the point. Had it been anyone else he would never have dropped it. He would have fought it out to the very end. Vainly now he wished he had not let the old habit of affection and the little touch of awe with which he regarded his father persuade him against his reason.

Affection and business never did mingle. Sentiment and science? Yes, they have a relation, but not when it comes to engineering calculations. Now just because he had given in to his father the old man would be ruined. The younger Meade's experience was not great enough to devise ways and means of strengthening the bridge entirely satisfactorily if the deflection continued. Perhaps no one could do that. A large part of it might even have to be taken down. The question would have to be referred to his father at the earliest possible

moment, he reflected, as he noted the deflection. And he felt a generous pang of sorrow at the humiliation the older man would certainly feel when his error was proved to him.

Meade realized in a flash that he had been living as it were in a fool's paradise, lulled by his feeling that his father must be right. Other things than professional honor and reputation and material success were involved. When the bridge was completed he was to have for his wife the woman he loved, so the old Colonel had said. When the bridge was completed his father was to retire with this last work as his crown. When the bridge was completed his own career was to begin. Now! Good God! The pang that shot into his heart was almost as great as that which touched him when Helen Illingworth fell with the slipping gusset plate and he only caught her at the last moment.

He stopped, feeling suddenly ill, as a very nervous, high-strung man may feel under the sudden and unexpected physical demand of a great shock. The reaction between mental and physical conditions was immediate and overpowering. He was weak still from the tonsilitis. He leaned against the diagonal at the end of C-10-R, clinging to it tightly to keep from falling, and again that strange fit of trembling he had suffered from on the bridge with Helen Illingworth, for which he cursed himself as a coward, struck him. Abbott, who had followed more slowly, stopped by him, somewhat surprised, somewhat amused, more indignant than both.

"Abbott," said Meade fiercely as the erecting engineer joined him on the pierhead, "if you put another

pound of load on that cantilever I will not be answerable for the consequences."

"What do you mean?"

"That deflection is nearly two inches deep now and every ounce or pound of added weight you put upon it will make it greater. Its limit will be reached mighty soon. If it collapses—" he threw up his hands—"the whole thing will go."

"Yes, if it collapses, that's true," said Abbott, "but it won't."

"You're mad," said Meade, taking unfortunately the wrong course with the older man.

"Why, boy," said Abbott, "that bridge will stand as long as creation. Look at it. That buckle doesn't amount to anything. It is only in one truss anyway. The corresponding member in the other truss is perfectly straight."

"Abbott, for God's sake, hear me," pleaded Meade in desperation. "Draw back the traveler and put no more men on the bridge. Stop work until we can get word to——"

"If I thought there was the least danger," said the other man, "I would do what you say, of course, but we are way behind now—weeks behind in spite of my driving. They don't seem to be able to get the stuff to me. There's a big penalty for non-completion of the contract within the limits. I get wires every day urging me on."

"I don't care what you get."

"You heard what the Colonel said last week."

"Yes, I heard, but it makes no difference, the work must stop."

"It can't—and it shan't," cried the other with sudden fierceness.

"Abbott!"

"Don't talk to me, boy. Damn the camber! I know my business. This isn't the first deflection I ever saw, is it?"

"No, of course not."

"Well, I tell you I can jack it back. That member's big enough and strong enough to hold up the world."

"What are you going to jack against?" Meade asked, and for the first time a little of Abbott's contempt appeared in the younger man's voice.

Abbott reflected that there was nothing firm enough to serve as a support for jacks and said rather grudgingly, for it seemed like a concession to the younger and junior engineer:

"Well, I can hook on to the opposite truss and pull it back with turn buckles."

"That will damage the other truss too much, Abbott," Meade retorted promptly. "It isn't possible."

"Then I'll think up some other scheme," returned Abbott indifferently, as if humoring the other. "We can't wait, we've got to hurry it along."

The two men made no special attempt to conceal their feelings. Abbott's indifference had been at first good-humored, but it was fast taking on another character and Meade's insistence and his evident bad opinion of the other man's obstinacy did not tend to make the discussion more amicable, or to convince either that the other was right or even that his opinions should be respected.

"Abbott, I'm just as much interested in finishing the job in a hurry as you are," explained Meade in a last effort to move him, and too late appealing to him more gently. "I—you see—Miss Illingworth, her father said——"

"Oh, you get the girl when the bridge is up?" asked Abbott shrewdly.

"Yes."

"Well, rest easy, son, that will only make me work the harder. I like you in spite of your fool ideas. I'm going to make a record for myself on this bridge. It's the biggest thing in the world. There's going to be no penalty against us on account of me. I won't stop work a minute," he explained patronizingly.

"There will be a bigger penalty if you don't do what I say, and paid in another way, in blood. And it will be your fault."

Now both men were angry and in their passion they confronted each other more resolute and fierce than ever.

"Look here," said Abbott, his fiery temper suddenly breaking from his control, "who are you anyway? You're only a kid engineer. Your father approved of the plan of this bridge. I guess we can afford to bank on his reputation rather than yours."

"Well, he doesn't know of this."

"Nobody is on the bridge now, and nobody is going to be on there until tomorrow morning. Wire him if you like. He'll wire Illingworth down at Martlet and we'll get word what to do."

"You won't put any men at work on the bridge until——"

"Not until tomorrow morning," said Abbott decisively, "if I don't hear from somebody at Martlet tomorrow morning the work goes on."

"But if my father wires you——"

"I take orders from the Martlet Company and no one else," was the short answer with which Abbott turned away in finality, so that the other realized the interview was over.

Meade wasted no more pleas on Abbott. As ill luck would have it something had happened to the telephone and telegraph wires between the city and the camp. After vainly trying to get a connection when he climbed back to the office Meade dressed himself, got a handcar, and was hurried to the nearest town on the railroad's main line. From there he sent a telegram and tried to get connection with New York by telephone, but failed. Moved by a natural impulse, in default of other means of communication, he jumped on the midnight train for New York. He would go himself in person and attend to the grave affair. Nothing whatever could be so important.

There had been some friction between Abbott and Meade before on occasions, not serious, but several times Meade had ventured to suggest something which to Abbott seemed useless and unnecessary, and the fact that subsequent events had more often than not proved Meade's suggestions to be worth while, had not put Abbott in altogether the best mood toward his young colleague. Abbott never forgot that Meade had really no official connection with the building of the bridge, and that he was only there as a special representative of his father, and although he could not help liking the

younger man, Abbott would have been better pleased if he had been left alone.

He was too honorable and too competent a man to diverge in any way from the specifications and plans, but in all those matters which are sometimes of great moment and which are of necessity left to the discretion of the erector, he liked to be free to follow his own devices. Consequently he was not predisposed to view any suggestions from Meade with any great degree of cordiality, or to receive what had amounted to a positive command with any especial warmth. As he reflected on the heated debate in his room before he went to sleep he almost blamed himself for what he considered a censurable weakness in having suggested that Colonel Illingworth be bothered by wire with such a trifling proposition. And so obsessed was he by his conviction of the strength of the bridge and his ability to bring back the wavering member to its proper relationship to the other parts of the structure or, if he could not, of the comparative unimportance of the deflection, that after Meade's departure he almost found himself wishing that something would prevent communication between New York and Martlet until he had had a chance to show that he was right.

Meade had not gone about it in the right way to move a man of Abbott's temperament. He realized that as he lay awake on the sleeper speeding to New York. Abbott was a man who could not be driven. He was a tremendous driver himself and naturally he could not take his own medicine. If Meade had received the announcement more quietly and if he had by some subtle suggestion put the idea of danger into Abbott's mind

all would have been well, for when he was not blinded by prejudice, or his authority or his ability questioned, Abbott was a sensible man thoroughly to be depended upon. But the news had come to Meade with such suddenness, Abbott had only casually mentioned it at the close of a lengthy conversation regarding the progress of the work as if it were a matter of no especial moment, that the sudden shock had thrown Meade off his balance.

Thereafter he could see nothing but danger and the necessity for action. How he should handle his superior, or rather the bridge's superior, was the last thing in his mind. Aside from his natural pride in his father and in the bridge and his fear that lives would be lost if it failed, unless he could get the men withdrawn, there was the complication of his engagement to Helen Illingworth.

Meade could not close his eyes, he could not sleep a moment on the train. His mind was in a turmoil. Prayers that he would get to his father and the bridge people in time to stop work and prevent loss of life, schemes for taking up the deflection, strengthening the member, and completing the bridge, and fears that he would lose the woman, stayed with him through the night.

He was too filled with anxiety and alarm to be anxious as to whether he was having a relapse or not, but it was a white-faced, bloodshot man in rough field garb—not intending or expecting to come to New York, he had not taken time to dress properly, he had dragged on the clothes at hand in his agitation—who half reeled through the gates of the Grand Central Station that

morning while curious people looked at him with interest and amazement.

To add to his misfortune the train had been delayed by a disastrous freight wreck on the line, and was two hours late. Everything was against him. Even the taxicab burst a tire and delayed him further in his progress downtown. It was ten o'clock before he reached his father's office in the Uplift Building, when he should have arrived much earlier. It was with frantic haste that he ran to the elevator and then to the office.

X

THE SON OF HIS FATHER INDEED

MEADE, Senior, was an old man. Although unlike Moses his eye was dim and his natural force abated, the evidences of power were still apparent, especially to the observant. There rose the broad brow of the thinker. His power of intense concentration was expressed outwardly by a directness of gaze from the old eyes which, though faded, could flash on occasion. Other facial characteristics of that snow-crowned, leonine head, which bespoke that imaginative power without which a great engineer could not be in spite of all his scientific exactitudes, had not been cut out of his countenance by the pruning knife of time.

He was a great engineer and looked it, sitting alone in his office with the telegram crushed in his trembling hand, despite the fact that his gray face was the very picture of unwonted weakness, of impotency, and abiding horror. The message had struck him a terrific blow. He had reeled under it and had sunk down in the chair in a state of nervous collapse.

Time was when he would have rallied from the shock, when the stroke of fortune would have found him ready to deal blow for blow. But he was now too old for that. He saw himself for the little remainder of his life bereft of all title and dignity, shamed, dishonored, with the blood of men and the tears of women and little children upon him.

The telegram fairly burned the clammy palm of his hand. He would fain have dropped it yet he could not. Slowly he opened it once more. Ordinarily, powerful glasses stimulated his vision. He needed nothing to read it again. It is doubtful whether his eyes saw it or not and there was not need, for the message was burned into his brain.

To a layman the message was harmless enough, indeed, inexplicable, but to the great engineer it spelled failure in the great project with which he had fondly hoped to crown his long, distinguished, and honorable career. It meant financial ruin to great men who had trusted to his skill; death and destruction to smaller men who had confided in his assurance; deprivation, sorrow, hardship, starvation, to dependent women and children.

He read again the mysterious words.

"*One and three-quarter inch camber in C-10-R.*"

There could be no mistake. The name that was signed to it was the name of his son, the young engineer, the child of his father's old age, whom he himself had trained to follow in his footsteps, to don the royal mantle of supremacy when he had laid it aside. Other things connected themselves with the hideous fact conveyed by the telegram. The boy, as the old man thought of him, had ventured to dispute his father's figures, to question his father's design, but the elder man had overborne him with his vast experience, his great authority, his extensive learning, his high reputation. Age had laughed youth to scorn.

And now the boy was right. Strange to say some little thrill of pride came to the old engineer at that moment. The boy in this was greater than he. But it was lost in the imminence and magnitude of the catastrophe. He tried to find out from the telegram when it had been sent. That day was a holiday—the birthday of one of the Worthies of the Republic—in some of the United States, New York and Pennsylvania among them, and only by chance had he come down to the office that morning. The wire was dated the night before. Perhaps even—no, the morning papers would have said if the inevitable accident had occurred. And he recalled that the state from which the bridge ran did not observe that day as a holiday. They would be working on the International as usual unless——

One and three-quarter inches of deflection! Good God! No bridge that was ever made could stand with a bend like that in the principal member of its compression chord, much less so vast a structure as that which was to span the greatest of rivers and to bring nation into touch with nation. He ought to do something, but what was there to do? Presently, doubtless, his mind would clear. But on the instant all he could think of was the impending ruin.

The Uplift Building, in which he had his offices, was mainly deserted on account of the holiday. The banks were closed and the offices and most of the shops and stores. It was very still in the hall and, therefore, he heard distinctly the door of the single elevator in service open with an unusual crash, then the sound of rapid footsteps along the corridor as of someone running. They stopped before the outer door of the suite which

bore his name. Instantly he suspected a messenger of disaster. The door was opened, the office was crossed, a hand was on the inner door.

The old engineer strove vainly to rise to meet the bearer of evil tidings, but failed. His trembling limbs would not support him. He sank back almost as one dead waiting the shock, the blow. It was not so much of himself as of the consequences to others he thought, although the one failure would dissolve the fame he had gained by all the successes of the past.

When the door was opened, instinctively he put his arm across his eyes as if to shield himself from the attack.

"Father," exclaimed the newcomer.

"Thank God," said the old man, dropping his arm, "you are here."

"You got my telegram?"

The other silently exhibited the crumpled paper in his hand.

"What have you done?"

"Why, I—nothing."

"Good God! Nothing! Why, you must have received it early this morning. I——"

"It's a holiday, don't you know? I only got it a few moments ago. The bridge?"

"Still stands."

"But for how long?"

"I can't say. The Martlet's resident engineer is mad. I begged, threatened, implored. I tried to get him to stop work, to take the men off the bridge, to withdraw the traveler, but he won't do it. Said you designed it, you knew. I was only a cub."

"But the camber?"

"He said, 'Damn the camber, I'll jack it into line again.' Like every other engineer who sees a big thing before him it looks to him as if it would last forever. I tried to get you on the telephone here and at the house last night and failed. I wired you. Then I jumped on the midnight express and——"

"What is to be done?" asked the old man.

Meade, Senior, was thankful that the younger man had not said, "I told you so," as well he might. But really his father's condition was so pitiful that the son had not the heart.

"Telegraph the Martlet Bridge Company at once," he answered.

"What shall we say?" asked the old man, uncertainly.

The young man shot a quick look at him, that question evidenced the violence of the shock. His father was old, broken, helpless, dependent, at last. . . .

"Give me the blank," he answered, "I'll wire in your name."

He repeated the telegram that he had sent to his father and added these words as he signed the old man's name to it:

"*Put no more load on the bridge. Withdraw men and traveler.*"

He read the message to his father. The old man nodded helplessly. The young man seized the telephone, called up the Western Union and soon the message was on the wire to the great bridge works in the Pennsylvania hills.

"Now, father," said the young man encouragingly, "don't give up. The Martlet people will pay attention to that message. Even if the bridge goes down, there will be no lives lost."

"How many men are working on it?"

"About two hundred. Abbott told me he wouldn't take a single man off. I wanted to tell them myself, but I couldn't do that. He is in charge. I am only representing you. He would not even agree to take direction from you."

"Of course not."

"We will get hold of the bridge people. Colonel Illingworth will telegraph Abbott to back up the traveler, withdraw the men, and get all possible load off the member. Pull yourself together. Let's figure out some way to strengthen it until we can replace it, or devise——"

"You are right, boy, you are right," said the old man, rising in his chair and turning toward his desk. "Let us get to work."

"Good," said the young man. "We ought to hear from Colonel Illingworth in half an hour and we'll pull the thing through yet."

XI

THE DEATH MESSAGE ON THE WIRE

"I CAN'T understand why we don't hear," said the young engineer, walking up and down the room in his agitation. "Two telegrams and now we can't get a telephone connection, or at least any answer after our repeated calls."

"It's a holiday there as well as here," said the older man. "There is no one in the office at Martlet."

"I'll try the telephone again. Someone may come in at any time."

He sat down at the desk, and after five minutes of feverish and excited waiting he finally did get the office of the Martlet Bridge Company. By a happy fortune it appeared that someone happened to come into the office just at that moment.

"This is Meade," began the young man, "the consulting engineer of the International Bridge. Understand? Yes. Well, at ten-thirty this morning I sent a telegram to Colonel Illingworth and an hour later I sent another. I've had no reply. I've been trying hard to get the office on the telephone ever since. What's that?" Young Meade turned to his father. "He says there's been no one in the office on account of the holiday. Both telegrams are on the desk. He just chanced to come in or I couldn't have got the message through."

"It's too late, too late," said the father, wringing his hands.

"Wait," said the son. He turned to the telephone again. "Give me your name—Johnson—you're one of the clerks there? Well, telephone Colonel Illingworth at his home and tell him to call me at this office at once. I'll hold this connection with you until I hear you've got him. It's most important. We're on the right track now, father," continued the young man reassuringly. "The bridge must be all right yet. We would have heard at once if it weren't. Keep up your courage. We're going to pull through, somehow."

In such talk a few anxious minutes passed.

"Yes," suddenly broke out the younger Meade, who had kept the receiver to his ear. "What! You can't find him? He isn't at home? He has gone away? Is the vice-president there—the superintendent—anybody? The men are having a jollification in the mountains, you say, and everybody has gone? How far away are they? Twenty miles! On the railroad? They went in wagons? There's no telephone? Now, listen, Johnson, this is what you must do. Get a car, the strongest and fastest you can rent and the boldest chauffeur, and a couple of men on horses too, and send up to that place wherever they are, and tell Colonel Illingworth that he must telephone me and come to his office at once. There are telegrams there that mean life and death and the safety of the bridge. You understand? Good. He says he'll do it, father. We've done all we can," he added. He hung up the receiver, sprang to his feet, looked at his watch. "It's so important that I'll go down there myself. I can catch the two-o'clock train,

and that will get me there in two hours. You stay quietly here in the office and wait until I get in touch with those people. I mean, I want to know where I can reach you instantly."

"I'll stay right here, my boy. Go, and God bless you."

As usual when in a great hurry there were unexpected delays and the clock on the tower above the big structural shop was striking five when a rickety station wagon, drawn by an exhausted horse, which had been driven unsparingly, drew up before the office door. Flinging the money at the driver, Meade sprang down from his seat and dashed up the steps. He threw open the door and confronted Johnson.

"Did you get him?" he cried.

"He isn't here yet. I sent an automobile and two men on horseback and——"

The next minute the faint note of an automobile horn sounded far down the valley.

"I hope to God that is he," cried the young engineer, running to the window.

"That's the car I sent," said Johnson, peering over his shoulder. "And there are people in it. It's coming this way."

"Johnson," said Meade, "you have acted well in this crisis and I will see that the Bridge Company remembers it."

"Would you mind telling me what the matter is, Mr. Meade?"

"Matter! The International——"

"Bert," exclaimed a joyous voice, as Helen Illingworth, smiling in delighted surprise, stepped through

the open door and stood expectant with outstretched hands.

Young Johnson was as discreet as he was prompt and ready. He walked to the window out of which he stared, with his back ostentatiously turned toward them. Most considerately he even whistled a little tune and drummed noisily upon the panes. After a quick glance at the other man, Meade swept the girl to his heart and held her there a moment. He did not kiss her before he released her. The woman's passionate look at him was caress enough and his own adoring glance fairly enveloped her with emotion. She looked at Johnson and her brow wrinkled in slight annoyance, but, though he felt unwelcome, that young man could not go and he had sense enough to know that he would be needed and that no more time could be wasted by the lovers. He coughed and turned as the two separated. It was the woman who recovered her poise quicker. To be sure she did not have the burden upon her shoulders that Meade had to support.

"What were you saying about our bridge when I came into the room?" she began, and Meade fully understood the slight but unmistakable emphasis in the pronoun—our bridge, indeed—"I was lying down this afternoon, but when I awakened my maid told me about your urgent calls for father," she ran on, realizing that some trouble portended and seeking to help her lover by giving him time. "I knew something must be wrong, so I came here. I didn't expect to see you. Oh, what is it?" she broke off, suddenly realizing from the mental strain in her lover's face, which the sudden sight of her had caused him to conceal for a moment, that something

terribly serious had happened, and she turned a little pale herself as she asked the question, not dreaming what the answer would be.

"Helen," said the young man, stepping toward her and taking her hands again, "we're in awful trouble."

"If it is any trouble I can share, Bert," said the girl, flashing at him a look which set his pulses bounding—at least she was to be depended on—"you know you can count on me."

"I know I can," he exclaimed gratefully.

"Now tell me."

"The International Bridge is about to fail."

The color came to her face again. Was that all? came into her mind. That was serious enough, of course, but it would not matter in the long run. Through its structural weakness the bridge might fail; through Abbott's obstinacy and pig-headedness those men might die on it, his father's reputation might go and his own, but as he looked into the eyes of the woman he knew that all these things would make no difference to her. Heart once given, love once proffered, they were his to the end. Her father! Well, Colonel Illingworth was not the deciding voice, so she had said before. That thought flashed into Meade's mind. Yet the glad consciousness was accompanied by a firm resolution to abide by the conditions as set forth by Colonel Illingworth. Bridge and woman, they went together for him. Indeed he intended to save his father, even if his own life and happiness, interwoven with the bridge, were the price of his endeavor. No one should ever know. It would be his fault. It was. He should have insisted on his contentions.

He would never involve in his own ruin this glorious woman, whatever her trust, her affection, her willingness. That bright youthful life at least should not go down with the bridge. The awful Web of Steel should not catch her in its meshes. He would tear the rigid bars apart with his own bleeding hands before that should happen.

Yet he would not have been the man she loved, the man who loved her, if he had not thrilled to her splendid ardent devotion, her whole-hearted trust in him. He did not quite realize that, as it takes two to make a quarrel, no man, however determined upon a course, can absolutely settle a woman's relationship to him without her consent, especially when he loves her and has told her so and received her love in return.

How much of all this Helen Illingworth realized, what her thoughts were, what resolutions she came to, what determinations were her own, her lover could not tell. She recognized the awful gravity, the terrible seriousness, of the situation of course. The bridge meant much to her even if in quite a different way. It was there he had saved her from the awful fall. It was there that he had told her that he loved her. If she had been given the choice she would have embraced the risk for the avowal if it could not have been brought about otherwise. The bridge might fall, but it was as eternal as her affection in her memory. Their engagement, or their marriage, had been made dependent upon the successful completion of the bridge. What of that? The proviso meant nothing to her when she looked at the white-faced agonized man to whom she had given herself.

Who dared condition love? What parental injunction could bind the free movement of human hearts? Age? What did age know about it? Here were youth, sorrow, love, life. While they had being they belonged to each other. Not the trusses and stringers of the great bridge were stronger than the intangible ties that bound heart to heart, and the steel was not half so real. Bridges might come and bridges might go, reputations fail and disappear, property be lost in ruin and disaster—it would make no difference. She was his and he was hers. The senses of possession and possessed alike would and should have the mastery.

"It is terrible, of course," she said quietly.

"Appalling."

"But you can do nothing?"

"If I could do you think I'd let the bridge, and you, go without——"

"I'm not going with the bridge," was her quick and decisive interruption.

They had both forgotten the presence of young Johnson, who was not only decidedly uncomfortable, but desperately anxious. He was about to speak when, into this already broken scene, came another interruption.

There was a rush of wheels on the driveway outside, the roar of a motor. Before Meade could answer the statement, into the room burst Colonel Illingworth. He was covered with dust, his face was white, his eyes filled with anxiety. The character of the summons had disquieted him beyond measure. Back of him came Severence, the vice-president, and Curtiss, the chief engineer.

"Meade, what of the bridge?" he burst out, with a quick nod to his daughter, knowing that nothing else could have brought the engineer there, especially in the light of the messages received.

Colonel Illingworth had not stopped to hunt for a wayside telephone. The automobile driven madly, recklessly through the hills and over the rough roads, had brought him directly to the office in the shortest possible time.

"There is a deflection one inch and three-quarters deep in one of the compression members, C-10-R," was the prompt and terrible answer.

Colonel Illingworth had not been president of the Martlet Bridge Company for so long without learning something of practical construction. He was easily enough of an engineer to realize instantly what that statement meant.

"When did you discover it?" he snapped out.

"Last night."

"Is the bridge gone?"

"Not yet."

"Why didn't you let us know?"

"I telegraphed father and, not hearing from him, I came down on the midnight train. It is a holiday in New York as well as here. I just happened to meet father in the office. He sent a telegram to you and not hearing from you, duplicated it an hour later. I tried half a dozen times to get you on the telephone and finally, by a happy chance, got hold of young Johnson."

"Where are your father's telegrams?"

"Here."

Colonel Illingworth tore the first open with trembling fingers?

"Why didn't you tell Abbott?" asked the chief engineer.

"You know Abbott. He said the bridge would stand until the world caved in. Said he could jack the member into line. He wouldn't do a thing except on direct orders from here."

"Your father wires, 'put no more weight on the bridge.' What shall we do?" interposed Colonel Illingworth.

"Telegraph Abbott at once."

"If the bridge goes it means ruin to the company," said the agitated vice-president, who was the financial member of the firm and who could easily be pardoned for a natural exaggeration under the terrible circumstances.

"Yes, but if it goes with the men on, it means— Johnson, are you a telegraph operator?"

"Yes, sir."

"Take the key," said the Colonel, who, having been a soldier, thought first of the men.

Johnson sat down at the table where the direct wire ran from the Bridge Company to the Western Union office. He reached his hand out and laid his fingers on the key. Before he could give the faintest pressure to the instrument, it suddenly clicked of its own motion. Everybody in the room stood silent.

"They are calling us, sir," said Johnson.

Colonel Illingworth nodded.

"It is a message from Wilchings, the chief of construction foremen of," Johnson paused a moment,

listening to the rapid click—"The International——" he said in an awestruck whisper.

It had come!

"Read it, man! Read it, for God's sake!" cried the chief engineer.

"*The bridge is in the river,*" faltered Johnson slowly, word by word, translating the fearful message on the wire. "*Abbott and one hundred and fifty men with it.*"

XII

THE FAILURE

IN spite of himself and his confidence in the bridge, and every look at the huge trusses rising from the massive piers and extending their long arms out to meet their sister trusses beginning to rise on the other side, re-enforced that confidence, Abbott felt a little uneasy the next morning. At bottom he had more respect for Meade's technical knowledge than he had displayed or even admitted to himself. The younger engineer's terrified alarm, his urgent pleading, his utter forgetfulness of the amenities that usually prevailed between them, his frantic but futile efforts to telephone, of which the operator told Abbott in the morning, his hurried departure to New York, were, to say the least, somewhat disquieting, much more so than he was fain to admit to himself.

Although it involved a hard and somewhat dangerous climb downward and took upwards of a half-hour of his valuable time, the first thing the erecting engineer did in the morning was to go down to the pier head and make a thorough and careful examination of the buckled member. C-10-R was the first great member of the right-hand truss, as you crossed the bridge, that sprang from the steel shoe and reached out over the water. It was, of course, a part of the great lower chord of the huge diamond-shaped truss, which, with its parallel sixty feet away on the other side of the bridge and its

two opposites across the river, supported the whole structure. If anything were wrong, seriously, irreparably wrong, with the member and it gave way, the whole truss would go. The other truss would inevitably follow suit, and the cantilever would immediately collapse. Abbott realized that, of course, as he climbed carefully down to the pier head and stood on the shoe.

Now the member was composed of four steel webs, each one made up of several plates of steel riveted together to form one huge plate. These four parallel webs were bound into one member and held rigid by steel lacings, which criss-crossed above and below the edges of the four webs. These steel lacings were angle bars riveted to the several webs and were also riveted through plates where they crossed, and finally were fastened to the edges of the webs. It was this massive and imposing piece of structural steel work which had got a little out of line, and which Abbott, perturbed in spite of himself, had come down to inspect, to see if there were any real ground for Meade's excitement and alarm.

It is wonderful how well-trained our physical senses may become. The final perfections of curvature in a great lens are the results of refinements of the sense of touch in the manufacturer's hands. So much had long experience taught Abbott that, as he stood by the member and surveyed it throughout its length, he could easily see that it had buckled, although the deviation was so slight, about two inches at its maximum in sixty feet. He brought with him a line and, with infinite care and pains, he drew it taut across the slight concavity like a bow-string. He had estimated the camber, or the distance between the center of the bow and the string,

at one and a half inches. As he made more careful measurements, he discovered that it was slightly over one and three-quarter inches. Did this denote an increase? Abbott thought not. The difference simply lay between an estimate, however careful, and the actual measurements.

An inch and three-quarters in seven hundred and twenty was scarcely noticeable, not noticeable at all to the untrained eye, unless actually squinting along the line, and it did not seem very much to Abbott, standing on the pier head and looking up through the network of struts and bracing and girders. As he stood there feeling himself an insignificant figure amid this great interwoven mass of steel, again the sense of its strength and stability came to him overpoweringly, so much so that he laughed aloud in a rather grim fashion at the unwonted nervousness which had been induced in his mind by Meade's words and actions.

He would have been content to have left the pier head and have climbed back to the floor of the bridge, but he was a conscientious man, so he pursued his investigations further. He climbed up on top of the member, which was easy enough by means of the criss-crossed lacing, and carefully inspected that lacing. He did not, of course, look at every one of the bars of steel that bound together the giant webs that made up the member, but he gave a very careful and minute scrutiny to the lacings at the center of the concavity, or sidewise spring from the right line.

He noticed, by getting down on his face and surveying the lacing bars closely, a number of fine hair-line cracks in the paint, surface traceries apparently, run-

ning here and there from the rivet holes. The rivets themselves had rather a strained look. Some of the outer rivets seemed slightly loose, where before they must have been tight, for the members, like all other parts of the bridge, had been carefully inspected at the shop and any looseness of the rivets would certainly have been noticed there. But, at the time these discoveries were made, Abbott's obsession as to the strength of the bridge had grown stronger. Lining it out, crawling over it, feeling its rigidity, he decided that these evident strains were to be expected. Of course the lacings that held the webs together would have to take up a terrific stress. They had been designed for that purpose.

The best engineer had made the design and now the best erector found no radical fault with it. The other members of the truss were still in line. Abbott clambered over to the next one and examined some of the lacings there. He found a few of those hair-line paint cracks; not quite so many, but still some. He had brought with him a small hammer and he struck the lacing here and there, straining his ear to see if he could discover any difference in resonance between those at this point, at which the greater stress was being brought, because of the curvature, and others in other places. There was a difference, but it would have taken a finer ear than Abbott's, somewhat deafened by the constant noise of the pneumatic riveters, to realize the danger in the slight increase in sharpness of the resonance of the lacings that were most strained. Largely because he did not find anything very glaring, and because he wanted to believe what he believed, the chief of

construction left the pier head and clambered up to the floor with more satisfaction in his heart than his somewhat surprising anticipation, which had so unwillingly grown under the stimulus of Meade's persistence, had led him to expect.

The whistle was just blowing for the commencement of work when he got back to the bridge floor. He could not but reflect, as the men came swarming along the tracks to begin their day's work, that the responsibility for their lives lay with him. Well, Abbott was a big man in his way, he had assumed responsibilities before and was perfectly willing to do so again, both for men and bridge. The workmen at least had no suspicions or premonitions of disaster.

Wilchings, the chief erecting foreman, knew about the camber. It had not bothered him. As he approached the two exchanged greetings.

"You're out early, Mr. Abbott," said Wilchings.

"Yes, I've been down to examine C-10-R."

Wilchings laughed.

"That little spring is nothing." He looked over the track and through the maze of bracing at the member. "If we had a pier somewhere we could hold up the earth with that strut. You didn't find out anything, did you?"

"Not a thing except some hair-line cracks in the paint around the rivets."

"You'll often find those where there's a heavy load to take up. This bridge will stand long after you and I and every man on it has quit work for good."

Now Wilchings was a man of experience and ability, and if Abbott had needed any confirmation of his opin-

ion this careless expression would have served. He did send him across the river to examine the half-completed cantilever on the other bank, upon which work had been suspended, awaiting shipments of steel. Wilchings later reported that it was all right, which was what he expected, of course, and this also added to Abbott's confidence.

The day was an unusually hard one. A great quantity of structural steel that had been delayed and which had threatened to hold up the work, arrived that day and the chief of construction was busier than he had ever been. He was driving the men with furious energy. Even under the best conditions it would be well-nigh impossible to complete the bridge on time. Abbott had pride in carrying out the contract and the financial question was a considerable one. Had it not been for that, perhaps, he would have paid more attention to Meade's appeal. So he hurried on the work at top speed.

But a man may be persuaded and yet not satisfied. All day long Abbott, confident, yet unforgetting, had in mind that questionable member. His work kept him on shore a large part of the time and the further away he got from it and from the powerful persuasiveness of the actually existent standing bridge, the stronger grew his unease. He sought to laugh himself out of it, to strengthen his convictions that it was nothing by self-ridicule. He worked himself up into a state of positive resentment and anger against Meade. He cursed him for a fool and himself likewise, still he could not get away from the thought. It was in his mind. Suppose —it was impossible to suppose!

Late in the afternoon, without saying anything to Wilchings, who had resumed his regular work, or to anybody in fact, Abbott went down to look at the member again. He climbed down a hundred feet or more to make another examination at the expense of much valuable time, for he had not passed so busy a day as that one since the bridge began. Abbott's judgment and reasoning told him that it was time thrown away. Nevertheless, despite his convictions, he went. He made another careful examination, and, in fact, duplicated his procedure of the morning. Everything was exactly as it had been. Those hair-line cracks had troubled him a little despite Wilching's remark. He studied them a second time. They were just as they had been, so far as he could tell, no larger, no more numerous. The lacings rang exactly the same under his hammer.

Abbott was cool enough ordinarily, but he was now so angry with himself for having given away to foolish fears, that, in a fit of temper, he threw the hammer into the water—and it was indicative of how the situation had got on his nerves—as he declared to himself that he would not go down there again. By this time old Meade and the bridge people and Curtiss, the chief engineer, must know all about it. He had actually visited the telegraph office a dozen times—unnecessarily, of course, since any wire would have been delivered at once to him. The fact that he had not heard from them gave him renewed confidence. They evidently regarded it of little moment. They were probably laughing at Meade, Junior, as they would laugh at him if they ever learned of his nervousness. He realized, of course, that he could never jack the springing member back into line. As

Meade had said, there was nothing to jack against. Also it would be practically impossible to haul it back by turn-buckles attached to the parallel truss. Indeed he had only said these things carelessly. It would have to stay the way it was until he got definite instructions from Martlet what to do.

He climbed back to the floor of the bridge and spent the next half-hour inspecting the progress of the work. The suspended span had already been pushed out far beyond the end of the cantilever. The work on the other side of the river had been stopped. As soon as they got the suspended span halfway over they would transfer the workmen and finish the opposite cantilever. Abbott calculated that perhaps in another week they could get it out if he drove the men. He looked at his watch, grudgingly observing that it was almost five o'clock. The men were nothing to Abbott. The bridge was everything. That is not to say he was heartless, but the bridge and its erection were supreme in his mind. As he stood surveying the mighty structure he felt as Napoleon might have felt when he looked beyond the men and horses who would perish in the next battle he was planning, to the mighty end he had in view.

The material was arriving and everything was going on with such a swing and vigor that he would fain have kept them at work an hour or two longer. The men themselves did not feel that way. Some of the employees of the higher grades had got the obsession of the bridge, but to most of them it was the thing they worked at, by which they got their daily bread—nothing more.

Those who worked by the day were already laying

aside their tools, and preparing for their departure. They always would get ready so that at the signal all that was left to do was to stop. The riveters, who were paid by the piece, kept at it always to the very last minute. As Abbott watched and waited he was unusually conscious in some strange way of the wild clamor of the work. He had been standing near the outer end of the cantilever and, as if to get rid of it, he turned and walked toward the bank. The pneumatic riveters were rat-tat-tatting on the rivet heads with a perfectly damnable iteration of insistent sound. The steam winch on the traveler was blowing off steam almost like a locomotive, preparatory to the rest of the night. A confused babel of voices, the clatter of hammers, the slithering, ringing sounds of swinging steel grating against steel as the huge cranes lifted the girders and braces and dropped them in their places, the deeper crash of beams being unloaded from the trucks and dropped heavily on the stringers and floor beams, the clanking of trucks, the grinding of wheels, the deep breathing of the locomotives, mingled in a hard, harsh, unharmonious diapason of horrid sound. Abbott's usual iron nerves had been severely strained that day. Ordinarily he was as indifferent to those noises as if he had been a deaf man. Now they irritated him. In his irritation he turned instinctively to the cause of it.

He was right above the pier head now. He looked down at it through the struts and floor beams and braces, fastening his gaze on the questioned member. There it stood satisfactorily, of course. Yet, something impelled him to walk out on the nearest floor beam to the extreme edge of the truss and look down at it once

more, leaning far out to see it better. He could get a better view of it with nothing between it and him. It still stood bravely. It was all right, of course. He wished that he had never said a word about it to anyone. He did not see why he could not regard it with the indifference that it merited. As he stared down at it over the edge of the truss the whistle for quitting blew.

Every sound of work ceased after the briefest of intervals, except here and there a few riveters driving home a final rivet kept at it for a few seconds, but only for a few seconds. Then, for a moment a silence like death itself intervened. It even seemed as if the ever blowing wind had been momentarily stilled. That shrill whistle and the consequent cessation of the work always affected everybody the same way. There was inevitably and invariably a pause. The contrast between the noise and its sudden stoppage was so great that the men instinctively waited a few seconds and drew a breath before they began to light their pipes, close their tool boxes, pick up their coats and dinner pails, and resume their conversation as they strolled along the roadway to the shore.

It seemed to Abbott, who had often noted the psychological effect of the stoppage of work on the men, that it had never been so silent on the bridge before. There was almost always a breeze, sometimes a gale, blowing down or up the gorge through which the river flowed, but that afternoon not a breath was stirring. The void was as empty and as still as the hearts or minds of the workmen. Abbott found himself waiting in strained and unwonted suspense for the next second or two, when

the silence would be broken almost as if by concerted effort by the men.

While he waited, his eyes were not idle. They were fixed on the member. The long warm rays of the afternoon sun illuminated it so clearly that he could see every detail of it. In that second immediately below him, far down toward the pier head he saw a sudden flash as of breaking steel. Low, but clear enough in the intense silence, he heard a popping sound like the snap of a great finger. Then the bright gleam of freshly broken metal caught his excited glance.

Abbott instantly realized what was happening. The lacing was giving way. Meade was right. The member would go and with it—— He had a second or two to call his own. The habit, the character of the man put them to the best use possible. The first pop or two was succeeded by a little rattle as it might be a rain of revolver shots heard from a distance, as the lacings gave way in quick succession. It was a sort of accompaniment to what Abbott shouted. He was a man with a powerful voice and he raised it to its limit and expanded it to its full compass.

The idle workmen, just beginning to laugh and jest, heard a great cry:

"*Off the bridge, for God's sake!*"

Two or three, among them Wilchings, who happened to be within a few feet of the landward end, without understanding why, but impelled by the agony, the appeal, the horror in the great shout of the master builder, leaped for the shore. On the bridge itself some stepped forward, some stood still staring, others peered downward. It takes minutes to tell it and to read it,

but probably not three seconds passed between the first snap of the first lacing bar and the utter collapse of the member. The great sixty-foot webs of steel wavered like ribbons in the wind. The bridge shook as if in an earthquake. There was a heavy, shuddering, swaying movement and then the six-hundred foot cantilever arm plunged downward, as a great ship falls into the trough of a mighty sea. Sharp-keyed sounds cracked out overhead as the truss parted at the apex, the outward half inclining to the water, the inward half sinking straight down.

Shouts, oaths, screams rose, heard faintly above the mighty bell-like requiem of great girders, struts, and ties smiting other members and ringing in the ears of the helpless men like doom. Then, with a fearful crash, with a mighty shiver, the landward half collapsed on the low shore, like a house of cards upon which has been laid the weight of a massive hand. The river section, carrying the greater load at the top and torn from its base, plunged, like an avalanche of steel, two hundred feet down into the river, throwing far ahead of it, as from a giant catapult, the traveler on the outward end of the suspended span and a locomotive on the floor beneath.

Wilchings, and the few men safe on the shore, stood trembling, looking at the bare pier head, at the awful tangled mass of wreckage on the shore between the pier and the bank; floor beam and stringer, girder and strut, bent, twisted, broken in ragged and horrible ruin, while the water, deeper than the chasm it had cut, rolled its waves smoothly over the agitations of the great plunge beyond the pier. They stared sick and faint at

the tangled, interwoven mass of steel, ribboning in every direction—for in the main the rivets held so it was not any defect of joints, but structural weakness in the body of the members that had brought it down—and inclosing as in a net many bodies that a few seconds before had been living men.

They had seen body after body hurled through the air from the outward end and, as they gazed fearfully in horror here and there dark figures floated to the surface of the water. They caught glimpses of white, dead faces as the mighty current rolled them under and swept them on. And no sound came from the hundred and fifty who had gone down with the bridge. The two-hundred foot fall would have killed them without the smashing and battering and crashing of the great girders that had fallen upon them or driven them from the floor and hurled them, crushed and broken, into the river.

They stared across the crumpled ruin between them and the pier and out beyond the now frightfully bare stretch of water to the uncompleted truss still rising grandly on the other side and the very contrast between its mass and strength and splendor emphasized the frightful, awe-inspiring nakedness of the battered pier before them.

Yes, Meade had been right. Abbott had one swift flash of acknowledgment, one swift moment packed with such regrets as might fill a lifetime—an eternity in a Hell of Remorse—before he, like the rest, had gone down with the bridge!

XIII

THE WOMAN'S CHOICE

THE message was received in ghastly silence. The blood ran cold in the veins as the people in the room took in the awful disaster. No one spoke for a moment, none moved. They had all been shocked into insensibility. Colonel Illingworth's face had lost its pallor. It was fiery red as if gorged with blood. Bertram Meade was whiter than any other man in the room. He was thinking of his father. What an end to such a career! One failure to outweigh a thousand successes.

The girl moved first. Her father and the young engineer were the two men in whom she was most interested, the two who were most deeply touched. They were both in agony, both in need of her. To which would she go? Unhesitatingly she stepped to the side of the younger. For this cause shall a woman leave her father and her mother! And never believe but that the father saw and understood even in the midst of his suffering. Youth thinks not, but fathers always know.

Helen Illingworth laid her hand on Meade's arm. She pressed close to his side. Together they confronted the older man. She had chosen.

"We are ruined," gasped the Colonel, tugging at his collar. "It's not so much the financial loss, although we put millions into that bridge, which now is only good for the scrap heap. We could stand that—but our

reputation! We'll never get another contract. I might as well close the works. And it is your father's fault. It's up to him. He was the greatest bridge engineer on this continent. He revised our design. He changed it in accordance with his knowledge and experience and he gave us column formulas of his own. The blood of those men is upon his head. Well, sir, I'll let the whole world know how grossly incompetent he is, how——"

"Sir," said young Meade, standing very erect and whiter than ever, since the hour had come to take the blame, "the fault is mine. I made the calculations. I checked and rechecked them. Nobody could know with absolute certainty the ability of the lower chord members to resist compression. But whatever the fault, it is mine. My father had absolutely nothing to do with it. He is——"

"He's got to bear the responsibility," cried the Colonel passionately. "It has his name——"

"No, I tell you," thundered the younger man. "For I'll proclaim my own responsibility. You knew that I had much to do with it. You said at the time that you were playing in great luck because you got not only the experience of my father, but the knowledge and the latest methods of his son, for one figure. Now the fault is all mine and I'll publish the fact from one end of the world to the other."

"It's a load I wouldn't want to have on my conscience," said Colonel Illingworth.

"The ruin of a great establishment like the Martlet," added Dr. Severence.

"The dishonor to American engineering," said Curtiss.

"And the awful loss of life," continued the Colonel.

"I assume them all," protested the young man, forcing his lips to speak, although the cumulative burdens set forth so clearly and so mercilessly bade fair to crush him.

"It was only a mistake," protested Helen Illingworth, drawing closer to her lover's side, and with difficulty resisting a temptation to clasp him in her arms.

"A mistake!" exclaimed her father bitterly.

"You said yourself," urged the woman, turning to the chief engineer, "that you didn't know whether the designs would work out, that nobody could know, but you were convinced that they would."

"I did," admitted Curtiss.

"Under the circumstances, then," said the girl, "I stand by——"

"Wait," interrupted the father. "Meade, there is one consequence you have got to bear that you haven't thought of."

"What is that?"

"Helen."

"What do you mean?"

"Do you think I'd let my daughter marry a man who had ruined me, an incompetent engineer by his own confession, a——"

"It is just," said Meade. "I have nothing further to do here, gentlemen. I must go to my father."

"Just or not," cried Helen Illingworth, "I can't allow you to dispose of me in that way, father. If he is as blamable as he says he is, and as you say he is, now

is the time above all others for the woman who loves him to stand by him."

"Miss Illingworth, you don't know what you are saying," said Meade, forcing himself into a cold formality he did not feel. "I am disgraced, shamed. There is nothing in life for me. My chosen profession —my reputation—everything is gone."

"The more need you have for me, then."

"It is noble of you. I shall love you forever, but——"

He turned resolutely away and walked doggedly out of the room. Helen Illingworth made a step to follow him.

"Helen," interposed her father, catching her almost roughly by the arm in his anger and resentment, "if you go out of this door after that man, I'll never speak to you again."

"Father, I love you. I'm sorry for you. I would do anything for you but this. You have your friends. That man, yonder, has nothing, nothing but me. I must go to him."

She turned and went out of the room without a backward look or another word, no one detaining her. Now it happened that by hurrying down the hill in the station wagon, which he had bidden wait for him, Bertram Meade had just caught a local train, which made connections with the Reading Express some twenty miles away, and Helen Illingworth in her dog-cart reached the station platform just in time to see it depart. She thought quickly and remembered that ten miles across the country another railroad ran and if she drove hard she could possibly catch a train which

would land her in Jersey City a few minutes before the train her lover caught.

She ran to the telephone and called for her own car in a hurry. She jumped into it a few minutes later and told the chauffeur that she wanted to catch the next express on the Pennsylvania Road. The news of the fall of the bridge was already abroad in the town. The man had heard how Meade had taken the blame, and had caught the local by furious driving. He had heard how Miss Illingworth had followed. It had become known, through her maid, that Meade and the president's daughter were engaged. The chauffeur scented a romance at once. And he drove the car as he had never driven before.

The girl caught the express and reached Manhattan Junction on time. In this case there was no delay. She had decided *en route* that it would be impossible for her to get from the Pennsylvania station to the Reading station in Jersey City in time to intercept her lover in the short margin of time at her disposal and she had determined upon a course of action. She would ride to the Hudson Terminal in the city and then go first to the office of Bertram Meade, Senior. If he were not there she would go to his residence. She had visited both places before, and she was certain that she would find both Meades at one place or the other.

The newsboys on the street were already crying the loss of the bridge. She saw the story displayed in lurid red headlines as she sprang into the taxi and bade the chauffeur hurry her to the Uplift Building further downtown. The bill she handed him in advance made him recklessly break the speed-limit, too.

XIV

FOR THE HONOR OF THE SON

BERTRAM MEADE, Senior, had not left the office during the whole long afternoon. The stunning force of his son's utterly unexpected announcement had wrecked the father as surely as the defective member would wreck the bridge. The boy might delude himself with the youthful hope that something could be done to save it, but the old man knew that the bridge was doomed and he realized that his own ruin in professional fame would follow its downfall.

He sat alone in his office quietly waiting for the end, not as one awaiting a death sentence, but rather as one who had been tried, convicted, and sentenced might await the moment of execution. As to the drowning, in the brief interval preceding the final asphyxia, life unrolls in rapid review, so pictures of the past took form and shape in his mind. He recalled many failures. No success is uninterrupted and unbroken. The little stones of progress are planted on the recurrent hills of mistake. It is through constant blundering that we arrive. "Roses, roses all the way" generally ends in the gibbet. He had learned to achieve by failing as everybody else learns. But failures and mistakes, which were pardonable in the beginning of his career, could not be condoned now; those should have taught him. He realized too late that his later achievement had begot in him a kind of conviction of omniscience, a

belief in his own infallibility, bad for a man. His pride had gone before, hard upon approached the fall. He had been so sure of himself that even when the possibility that he might be mistaken had been pointed out and even argued, he had laughed it to scorn. His son's arguments he had held lightly on account of his youth and comparative inexperience—to his sorrow he realized it, too late.

Again came that strange feeling of pride, the only thing which could in any way alleviate his misery or lighten his despair. It was his own son who had pointed out the possible defect. Youth more often than not disregards the counsel of age. In this case age had made light of the warnings of youth. It was a strange reversal he thought, grimly recognizing a touch of sardonic and terrible humor in the situation.

Of course in that swift survey of his career which he was making, he counted success after success, cumulating in magnitude and greatness. Not easily, not lightly, had he risen to the chief place in his profession. Verily his path to the stars had been through difficulties, as well as failure, and yet he recognized bitterly that no one would ever think of his success again in the face of this one awful failure. Certain words that he had read in his Bible came to him and seemed strangely applicable, though here was no question of moral guilt.

"*When the righteous turneth away from his righteousness and committeth iniquity—shall he live? All his righteousness that he hath done shall not be mentioned; in his trespass that he hath trespassed and in his sin that he hath sinned, in them shall he die.*"

He had always rather felt some injustice in the proposition despite its divine sanction. He had questioned it. He did not question it now. He knew that when men looked at the finest structure due to his cunning devising and scientific planning they would say:

"Yes, that's one of Meade's designs. I wonder how long it will stand. You know he was responsible for the International."

In his case the end would not crown the work. It would destroy it. He would be remembered as one confounded like the builders of Babel, the tower by which men overpassed the limit divine.

"Whom the gods destroy they first make mad." Well, he had been mad enough. If he had only listened to the boy. And now there was nothing he could do but wait. Yes, as the long hours passed and the sun declined, and the evening approached, there suddenly flashed upon him that there was still something he could do. He had experienced some strange physical sensations during that afternoon, unease in his breast, some sharp pains about his heart. What did it mean? Was it mental or physical? He forgot them for the moment in the idea that had come to him.

When the bridge fell he would avow the whole responsibility, take all the blame. Fortunately for his plans his son had reduced to writing his views on the compression members, which had almost taken the form of protest, and this letter had been handed to his father. His first mind had been to tear it up after he had read it and had overborne the objections contained therein, but on second thought he had carefully

filed it away with the original drawings. It was, of course, in the younger Meade's own handwriting.

He went to his private safe, unlocked it,—and that he was a long time over the combination might have been indicative of his state, but he thought of the delay with nothing but vexation—and brought out the plans. He had intended upon the completion of the bridge to give the letter back to the young man. He had keenly enjoyed by anticipation his prospective little triumph when time had proved the father right, the son wrong. He opened the drawings and found the letter attached to the sheet of drawings. He put back the other drawings and closed the safe without locking it. Then he went back to the desk and considered the document. There were the calculations of the younger Meade. He was too old and tired to verify them all and there was no need. The bridge itself was doing that.

But he read the letter over, and in the illumination of the event he wondered dumbly how he could have failed to see the clearness, the cogency of the arguments, the finality of the conclusions, even without the careful computations he could not now follow. He had been blind, mad. He laid the paper down on his desk and put his hand to his heart. Yes, that pang must be mental.

We look before and after. Some super-men, perhaps, see more at the first glance than at the second, but most men, even the great, comprehend more largely in the afterlook. These papers, when they were published, with his own comment or admission, would rehabilitate the younger Meade. They would do more to confirm his own damnation because it would appear from them that he

had been unable even to see the truth when it was presented to him. Well, he would be condemned so completely anyway that any addition, or subtraction for that matter, would scarcely alter the state of affairs.

Of course he would submit those papers to the public at once. Was there anything else he could do? Yes. He sat down at the desk and drew a sheet of paper before him and began to write. Slowly, tremblingly, he persevered, carefully weighing his words before he traced them on the paper. He had not written very long before the door of the outer office opened and he heard the sound of soft footsteps entering the room. He recognized the newcomer. It was old Shurtliff, a man who had been his private secretary and confidential clerk for many years. He stopped writing and called to him.

To a wonderful capacity for divining his employer's mind and completing his often brief and unfinished sentences by an intuition which was almost uncanny, Shurtliff added a quietness of manner that would have been annoying to some men, but which was most admirably complementary to the brisk, brusque, hurried, energetic habit of his employer and friend, who was all action, who could never draw a plan even or make a design without leaving it at frequent intervals to walk up and down the room or to throw up his arms, to get motion and action into life.

Shurtliff was an old bachelor, gray, thin, tall, reticent. He had but one passion—Meade, Senior; but one glory—the reputation of the great engineer. Yes, and as there is no great passion without jealousy, Shurtliff was filled with womanly jealousy of Bertram Meade

because his father loved him and was proud of him. Shurtliff knew all about the private affairs of the two engineers, father and son. He knew all about the protest of the younger Meade. The father had told him just what he intended to do with it.

Shurtliff's life was bound up in the office. Even holidays and Sundays found him there for a part of the time at least. He might not have anything at all to do, indeed his work had been growing lighter as the older Meade had gradually withdrawn himself from active practice, but the old secretary was only happy there. He could breathe more freely and think more pleasantly and live more contentedly in the office than anywhere else. He had few friends. None at all who weighed in the balance with the older Meade.

Shurtliff might have been a great man if left to himself or forced to act for himself. But pursuing a great passion so long as he had he had merged himself in the more aggressive personality of his employer and friend. He had received a good engineering education, but had got into trouble over a failure, a rather bad mistake in his early career, too big to be rectified, to be forgiven, or condoned. The older Meade had taken him up, had been kind to him, had offered to try to put him on his feet again, but Shurtliff had grown to love the temporary work in which he had been engaged and he had no wish for anything else.

His big failure had increased his natural timidity, so he stayed on. He had become a part of the old man's life. As years went by the secretary came to realize that he could never be anything else. The ambitions of youth were abandoned. He no longer

dreamed dreams or saw visions. Well, why not? He was absolutely alone in the world. Meade had dealt generously with his humble coadjutor; Shurtliff reasoned, perhaps, that he had as much from life as was coming to him; his church, his modest club, the charities and benefactions he loved to indulge in, assurance for his old age, and Meade himself. What could such a man as he ask more?

It has been said that he was jealous of the younger Meade; not meanly, not unpleasantly jealous, more resentful perhaps at the relative amount of affection the god of his idolatry bestowed upon him. He knew that he had to take second place and that he ought to take second place, and that if he failed to do so it would have been a reflection upon the character of the man whose personality and fame were dearer to him than anything else. Yet he did not enjoy that position.

Young Meade had never been able to get very far into the personality of Shurtliff, but he liked him and respected him. He realized the man's devotion to his father and he understood and admired him. Aside from that jealousy the old man could not but like the young one. He was too like his father for Shurtliff to dislike him. The secretary wished him well, he wanted to see him a great engineer. Of course he could never be the engineer that his father was. That would not be in the power of man. But still, even if he never attained that height, he could yet rise very high. Shurtliff would not admit that there was anything on earth to equal Meade, Senior.

In his dry, quiet way he had laughed with the older man over the presumption in the younger man's pro-

test and argument. Oh, not in the presence of the younger man of course, but he had thoroughly enjoyed it. He was waiting for the time to come for the return of the protest. Meade, Senior, who had accepted all this devotion without hesitation and perhaps without fully understanding it, had told him that as he had heard the protest and argument he should be present when it was returned. Shurtliff's own engineering skill was not sufficient, since it had only been kept up by association as a secretary to the elder man, not in active practice, to enable him to pass judgment on the point himself.

The secretary was greatly surprised that afternoon as he stopped beside his own desk in his little private office, partitioned from the outer room, to hear his name called from the inner office. He recognized his employer's voice, of course, yet there was a strange note in it which somehow gave him a sense of uneasiness. He went into the room at once and stopped aghast.

"Good God, Mr. Meade!" he exclaimed.

Ordinarily he was the quietest and most undemonstrative of men. There was something soft and subtle about his movements. An exclamation of that kind had hardly escaped him in the thirty years of their association. He checked himself instantly, but Meade, Senior, understood that something of his own mental turmoil, the agony inward and spiritual, must have appeared in the outward and visible. He did not doubt his face told the story. The completeness of the revelation and the terrible nature of the story he could not guess. The day before Shurtliff had left Meade a hale, hearty, vigorous, somewhat ruddy man. Now he

found his employer old, white, trembling, stricken. Meade looked at Shurtliff with a lack-luster eye and with a face that was dead while it was yet alive.

"Mr. Meade," began the secretary a second time, "what is the matter?"

"The International Bridge," answered the other, and the secretary noticed the strangeness of his voice more and more.

"Yes, sir, what about it?"

"It's about to collapse. Perhaps it has failed already."

"Collapse? Impossible!"

Meade passed his hand over his brow and then brought it down heavily on the desk.

"As we sit here, maybe, it is falling," he added somberly in a sort of dull, impersonal way.

Into the mind of the secretary came a foolish old line: "London bridge is falling down, falling down!" He must be mad or Meade must be mad.

"I can't believe it, sir. Why?"

"There's a deflection in one of the lower chord members of one and three-quarters inches. It's bound to collapse. The boy was right, Shurtliff," explained Meade.

"That can't be, sir," cried out the secretary with startling energy.

He would not allow even the idol itself to say that its feet were of clay.

"It can and is. He was right and I was wrong. I am ruined."

"Don't say that, sir. You have never failed in anything. There must be some means."

"Shurtliff, you ought to know there is no power on earth could save that member. It's only a question of time when it will fail."

"But young Mr. Meade?"

"He telegraphed me last night—this morning. I didn't get the wire. He couldn't make telephone connections, so he came down on the night train. Abbott refuses to take the men off the bridge unless he gets orders from Martlet. We tried to get in touch with them. At last he went down himself. I am expecting a wire every minute. If the bridge will only stand until quitting time the men will all be off, and there won't be any lives lost, but if not——"

The secretary leaned back against the door-jamb, put his hand over his face, and shook like a leaf. The old man eyed him.

"Don't take it so hard," he said. "It's not your fault, you know."

"Mr. Meade," burst out the other man, "you don't know what it means to me. A failure myself, I have gloried in you. I—you have been everything to me, sir. I can't stand it."

"I know," said Meade kindly. He rose and walked over to the man, laid his hand on his shoulder, took his other hand in his own. "It hurts more, perhaps, to lose your confidence in me than it would to lose the confidence of the world."

"I haven't lost any confidence, sir. We all make mistakes. I made one, you know, and you took me up."

"It's too late for anybody to take me up. Men can't make mistakes at my age. No more of that. We have still one thing to do."

"And what is that, sir?"

"Set the boy right before the world."

"And ruin yourself?"

"Of course, the truth is what ruins me."

"But if I were your son, sir, said the secretary, "rather than see you ruined I would take the blame on myself. He can live it down."

"But he is not to blame. On the contrary he was right, and I was wrong. Here, Shurtliff, is his own letter. You know it, you saw him give it to me. You heard the conversation and I have written out a little account explaining it, stating that I made light of his protests, acknowledging that he was right and I was wrong, taking the whole blame upon myself. He will be back here tonight I am sure. I intended to give it to him."

"Oh, don't do that, Mr. Meade."

"You have no son of your own. You don't know what you ask."

"Let the boy bear it," urged Shurtliff desperately. "By my long service to you, I beg——"

The telephone bell rang.

"The Bridge!" clamored the insistent bell.

The two old men stared at the instrument. It was the weaker who acted, in obedience to a sign from the engineer. Staggering almost like a drunken man, Shurtliff left his place by the door and passing his companion, whose turn it was to shrink back against the wall, he reached his thin hand out and lifted up the telephone, its bell vibrating it seemed with angry, venomous persistence through the quiet room.

"It's a telegram," he whispered. "Yes, this is Mr.

Meade's private secretary. Go on," he answered into the mouthpiece of the telephone.

There was another moment of ghastly silence while he took the message. It was typical of Shurtliff's character that in spite of the horrible agitation that filled him, he put the instrument down carefully on the desk, methodically hanging up the receiver before he turned to face the other man. He spoke deprecatingly. No woman could exceed the tenderness he managed to infuse into his ordinarily dry, emotionless voice.

"The bridge is in the river, sir."

"Of course, any more?"

"Abbott—and one hundred and fifty men with it."

"Oh, my God!" said the old man.

He staggered forward. Shurtliff caught him and helped him down into the big chair before the desk. The news had been discounted in his mind, still some kind of hope had lingered there. Now it was over.

"We must wire Martlet," he gasped out.

"The telegraph office said the message was addressed to you and Martlet, so they have got the news, sir."

"It won't be too late for the last editions of the evening papers, either," said the old man. "Shurtliff, I was going to give these documents to the boy when he got back, but I want them to appear simultaneously with the news of the failure of the bridge. "Wait." He seized the pen and signed his name to the brief letter of exculpation.

The writing in the body of the document was weak and feeble, the signature was strong and bold. He gathered the papers up loosely.

"Here," he said, "I want you to take them to a newspaper—the *Gazette*—that will be certain to issue an extra if it is too late for the last edition. I want this letter of his with mine to go side by side with the news. There must not be a moment of uncertainty about it."

"Mr. Meade, for God's sake——"

"Don't stop to argue with me now. Take a taxi and get there as quickly as you can. You are carrying my honor, and my son's reputation. Go."

The old man spoke sharply—imperiously—in such a tone as he rarely used to the other. White as death himself, and greatly shaken, Shurtliff took the papers, folded them up methodically, and hunted for an envelope.

"Don't stay for anything, Shurtliff," repeated Meade, "but go quickly. Stay at the *Gazette* office until the extra comes out. Bring me one. I'll wait here for you."

Shurtliff did not dare to say anything further. Although thousands of protests rushed to his lips he did not give them utterance. As if it had been an ordinary commission he was charged to execute, he turned and walked out of the room. He paused as he reached the door and looked back. The old engineer sat before his desk, the pen still in his right hand, his left hand clenched and extended across the desk. He sat erect. Something of the dignity and the pride and strength and firmness of the days before had come back to him. He smiled faintly. His old friend closed the door behind him and departed.

XV

FOR THE HONOR OF THE FATHER

TWO and one-half hours later a group of anxious reporters, clustered at the door of the Uplift Building, were galvanized into life by the arrival of a taxicab. The chauffeur had driven like one possessed. Out of it leaped Bertram Meade. He was recognized instantly.

"At last," said the foremost of them, as he recognized the newcomer. "We'll get something definite now."

"You know about the bridge, Mr. Meade," asked another, striving to force his way through the crowd, which broke into a sudden clamor of questioning.

Meade nodded. He recognized the first speaker, their hands met. This was a man of his own age named Rodney, who had been Meade's classmate at Cambridge, his devoted friend thereafter. Instead of active practice he had chosen to become a writer on scientific subjects and was there as a representative of *The Engineering News*. There were sympathy and affection in his voice, and look, and in the grasp of his hand.

"Have you seen my father, Rodney?" Meade asked, quickly moving to the elevator, followed by all the men.

"At the house they said he was not there, and here at the office we get no answer."

As Meade turned he saw his father's secretary coming slowly through the entrance.

"There's his secretary," he said. "Shurtliff," he called out.

"Yes, Mr. Meade," said the old man, who was a pitiable spectacle.

For an instant young Meade realized what this would be to Shurtliff.

"My father?"

"I left him in the office two hours ago."

"Had he heard the news?"

"It had just come, sir, and——"

"Where have you been?"

"He told me to—to—go away and—and leave him alone. I have been wandering about the streets. My God, Mr. Meade, what is going to become of us?"

Outside in the street the newsboys were shrieking:

"Extry! Extry! All about the collapse of the International Bridge. Two hundred engineers and workmen lost."

Shurtliff had one of the papers in his hand. Meade tore it from him.

"WHO IS RESPONSIBLE?" stared at him in big red headlines.

"Gentlemen," said Meade, "I can answer that question"—he held up the paper so that all might see—"the fault—the blame—is mine."

"We'll have to see your father, Bert," said Rodney.

"He can add nothing at all to what I have said, old man."

"He will have to confirm it," said another. "It's too grave a matter to rest on your word alone."

"You can't see my father."

"He is in this building, we know, and he'll never

leave it without running the gauntlet of us all," cried another amid a chorus of approval.

Meade realized there was no escape. They all piled into the elevator with him and Shurtliff. They followed him up the corridor. He stopped before the door of the office.

"I forbid you to come in," he said. "This is my father's private office——"

"Have no fear, Bert," said Rodney firmly. "We don't intend to break in. We understand how you feel. We won't cross that threshold unless and until you invite us. But I point out to you that this is a matter of the greatest public concern, that hundreds of lives have been lost, that the whole world is interested, that somebody is to blame. You say that you are, but your father was the chief engineer. His is the responsibility unless it can be shown otherwise."

"If you will give me ten minutes, Rod, I will admit you and all the rest. You can then see my father and you may question him fully."

"Very good, that's perfectly fair," said Rodney. "And I am sure I speak for the others. We will wait here until you say the word and then all we shall want will be a statement from your father."

"Thank you, old man. Come, Shurtliff," said Meade, turning his key in the lock. The two men entered and carefully closed the door behind them.

The door was scarcely shut when Helen Illingworth left the elevator and came rapidly up the corridor. She had called at the office before and had no need to ask the way. The reporters gathered around the door moved to give her passage while they stared at her with

deep if respectful curiosity. Many of these men were the iron and steel business reporters. They did not know her, of course, but her beauty, her distinction, and her interest, and even her distress, were evident. The reporters who dealt in social matters would have recognized her at once. Indeed her face was vaguely familiar to some of them because she was a reigning beauty and a belle, and her picture had appeared in different papers many times.

"Pardon me, gentlemen," she began, "but I am very anxious to see the younger Bertram Meade."

"He has just gone into the office," answered Rodney respectfully.

The girl raised her hand to knock.

"A moment, please; perhaps you had better understand the situation. The International Bridge——"

"I know all about it."

"I represent *The Engineering News* and these other gentlemen various New York papers. Now Meade, Junior, has just assumed the full responsibility for the faulty construction and we are waiting to get confirmation of that from his father. It is a serious matter and——"

The girl came to a sudden determination. She could not declare herself too soon or too publicly.

"My name is Illingworth," she said, and as the hats of the surprised reporters came off, she continued, "I am the daughter of the president of the Martlet Bridge Company, which was erecting the International."

"Yes, Miss Illingworth," answered Rodney, "and did you come here to represent him?"

"I am Mr. Bertram Meade, Junior's, promised wife,

and I am here because it is the place where I ought to be. When the man I love is in trouble I must be with him."

Now she raised her hand again, but Rodney was too quick for her. He knocked lightly on the door and then struck it heavily several times. The sound rang hollowly through the corridor as it always does when the door of an empty room is beaten upon. There was no answer for a moment.

"Oh, I must get in," said the woman.

Rodney knocked again and this time the door was opened. Shurtliff stood in the way. He had been white and shaken before, but there are no adjectives to describe his condition now. So anguished and shocked was his appearance that everybody stared. Shurtliff moistened his lips and tried to speak. He could not utter a word, but he did manage to point toward the private office.

"Perhaps I would better go first," said Rodney, as the secretary stepped back to give them passage.

Helen Illingworth followed and then the rest. Young Meade was in the private office into which they all came. He was standing erect by his father's chair. He was pale and strained also, but in his eyes burned the fire of deep determination. The great bulk of the old engineer was slouched down in that chair. His body was bent down over his desk. His head lay on the desk face downward. One great arm, his left, extended shot straight across the desk. His fist was clenched, his right arm hung limp by his side. He was still.

There was something unmistakably terrible in his motionless aspect. They had no need to ask what had

happened. A sharp exclamation from the woman, not a scream but a sort of catch of the breath as if to repress an outbreak, was the only sound that broke the silence, as she alone went toward the standing engineer. The men stood there bareheaded while Helen Illingworth passed around Rodney and stepped to her lover's side.

"You can't question my father now, gentlemen," said Meade, who from Meade Junior had suddenly become Meade Only, "he is dead."

In the outer office they heard Shurtliff brokenly calling the doctor on the telephone and asking him to notify the police.

"Did he——" began one hesitatingly.

"He was too big a man to do himself any hurt, I know," answered Meade proudly, as he divined the question. "The autopsy will tell. But I am sure that the failure of the bridge has broken his heart."

"And we can't fix the responsibility now," said Rodney, who for his friend's sake was glad of this consequence of the old man's death.

"Yes, you can," said the young man.

He leaned forward and laid his right hand on his dead father's shoulder. Helen Illingworth had possessed herself of his left hand. She lifted it and held it to her heart. The engineer seemed unconscious of the action and still it was the greatest thing he had ever experienced. Meade spoke slowly and with the most weighty deliberation in an obvious endeavor to give his statement such clear definiteness that no one could mistake it.

"Here in the presence of my dead father," he began, "whose life I have ended and whose career I have ruined, but whose fame shall be unimpaired, I solemnly

declare that I alone am responsible for the design of the member that failed. My father was getting along in years. He left a great part of the work to me. He pointed out what he thought was a structural weakness in the trusses, but I overbore his objections. I alone am to blame. The Martlet Bridge Company employed us both. They said they wanted the benefit of my father's long experience and my later training and research."

"Do you realize, Meade," said Rodney, as the pencils of the reporters flew across their pads, "that in assuming this responsibility which, your father being dead, cannot be——"

"I know it means the end of my career," said Meade, forcing himself to speak those words. "My father's reputation is dearer to me than anything on earth."

"Even than I?" whispered the woman.

"Oh, my God!" burst out the man, and then he checked himself and continued with the same monotonous deliberation as before, and with even more emphasis, "I can allow no other interest in life, however great, to prevent me from doing my full duty to my father."

Indeed, as he had been fully resolved to protect his old father's fame had the father survived the shock, the fact that the old man was dead and helpless to defend himself only strengthened his son's determination. The appeal of the dead man was even more powerful than if he had lived. Meade could not glance down at that crushed, broken, impotent figure and fail to respond. It was not so much love—never had he loved Helen Illingworth so much as then—as it was

honor. The obligation must be met though his heart broke like his father's; even if it killed him, too.

And the woman! How if it killed her? He could not think of that. He could think of nothing but of that inert body and its demand. He had to lie, even to swear falsely, before God and man if necessary, for him. There was no other possible answer to what Meade, wrongly if you will, but nevertheless unmistakably, conceived to be his father's appeal. He completely misjudged his dead father, to be sure. But that thought did not enter his head. He spoke as he did because he must.

"Have you no witnesses, no evidence to substantiate your extraordinary statement?" asked Rodney.

"I can substantiate it," said Shurtliff, coming into the room, having finished his telephoning. "The doctor and the police will be here immediately, but before they come——" and he drew himself up and faced the reporters boldly. "Gentlemen, I can testify that everything that Mr. Bertram Meade has said is true. I happened to be here when my dead friend and employer got the telegram announcing the failure of the bridge and, although he knew it was his son's fault, he bravely offered to assume the responsibility and he told me to go to the newspapers and tell them that it was his fault and that his son had protested in vain against his design."

"Why didn't you do it?" asked one of the reporters.

"I couldn't, sir," faltered the old man. "It wasn't true. The son there was to blame."

He sank down in his seat and covered his face with

his hands and broke into dry, horrible sobs. It was not easy for him either, this shifting of responsibility.

"You see," said young Meade, "I guess that settles the matter. Now you have nothing more to do here."

"Nothing," said Rodney at last, "not in this office at least. We must wait for the doctor, but we can do that outside."

"Rod, will you kindly take charge outside—my father's secretary, you see, is not able to do so—and let no one come in here except the doctor until the police arrive. You have your story?"

"Yes," said Rodney with a great pity for his friend, in whose innocence he somehow continued to believe in spite of what he had said. "We've had a full account of the accident telegraphed from the works and now this completes it."

One by one the men filed out, leaving the dead engineer with his son, the secretary, and the woman in the room.

The iron strain which Meade had put upon himself gave way and not the least part of his breakdown was the consciousness of the lie he had told so bravely and so gallantly to shield his father. And now at last came the realization that he had not only thrown away his own reputation and career, but that he had cast the woman he loved into the discard also. He drew his hand away from her, turned, rested his head on his arm on the top of the low bookcase as if to shut out from his sight what he stood to lose.

"Bert," said the woman, coming closer to him and laying her hand on his shoulder, while he made no effort to turn his head around, "why or how I feel

it I cannot tell, but I know in my heart that you are doing this for your father's sake, that what you said was not true. Things you have said to me——"

"Did I ever say anything to you," began Meade in fierce alarm, while Shurtliff started to speak but checked himself, "to lead you to think that I suspected any weakness in the bridge?"

The woman was watching him keenly and listening to him with every sense on the alert. Nothing was escaping her and she detected in his voice a note of sharp alarm and anxiety as if he might have said something which could be used to discredit his assertion now.

"Perhaps not in words but in little things, suggestions," she answered quietly. "I can't put my hand on any of them, I can hardly recall anything, but the impression is there."

Meade smiled miserably at her and again her searching eyes detected relief in his.

"It is your affection that makes you say that," he said, "and as you admit there is really nothing. What I said just now is true."

It was much harder to speak the lie to this clear-eyed woman, who loved him, than to the reporters. He could scarcely complete the sentence, and in the end sought to look away.

"Bertram Meade," said the woman, putting both her hands upon his shoulder, "look me in the face and before God and man, and in the presence of your dead father and remembering I am the woman you love, to whom you have plighted yourself, and tell me that you have spoken the truth and that the blame is yours."

Meade tried his best to return her glance, but those

blue eyes plunged through him like steel blades. He did not dream in their softness could be developed such fire. He was speechless. After a moment he looked away. He shut his lips firmly. He could not sustain her glance, but nothing could make him retract or unsay his words.

"I have said it," he managed to get out hoarsely.

"It's brave of you. It's splendid of you," she said. "I won't betray you. I don't have to."

"What do you mean?" asked the man.

But the woman had now turned to Shurtliff. In his turn she also seized him in her emotion and she shook him almost eagerly.

"You, you know that it is not true. Speak!"

But she had not the power over the older man that she had over the younger. The secretary forced himself to look at her. He cared nothing for Miss Illingworth, but he had a passion for the older Meade that matched hers for the younger.

"He has told the truth," he cried almost like a baited animal. "No one is going to ruin the reputation of the man I have served and to whom I have given my life without protest from me. It's his fault, his, his, his!" he cried, his voice rising with every repetition of the pronoun as he pointed at Meade.

Helen Illingworth turned to her lover again. She was quieter now.

"I know that neither of you is telling the truth," she said. "Lying for a great cause, lying in splendid self-sacrifice. You are ruining yourself for your father's name and he is abetting. Why? It can't make any difference to him now. It would not make any dif-

ference to him even if you were responsible for the collapse of the bridge. We all make mistakes. My father has made many, and Mr. Curtiss. But it makes a great difference to me. Have you thought of that? I'm going to marry you anyway. All that foolish talk about our marriage depending on the bridge is nothing. I told my father so. He said he'd repudiate me if I came here. But he'll not do that. He'll be terribly angry, but he'll forgive me. Only tell me the truth, Bert. By our love I ask you. If you want me to keep your secret I'll do it. Indeed I'll have to keep it, for I have no evidence yet to prove it false, but if you won't tell me I'll get that evidence, I will find out the truth, and then I shall publish it to the whole world and then——"

"And you would marry me then?" asked Meade, swept away by this profound pleading.

"I will marry you now, instantly, at any time," answered the girl. "Indeed you need me. Guilty or innocent, I am yours and you are mine."

"You don't understand," said Meade. "I am ruined beyond hope. I can't drag you down."

"No," said the girl, "but you can lift me up as high as your heart, and no man can place me in a nobler position."

"Listen," protested the engineer, "nothing will ever relieve me of the blame, of the shame, of the disgrace of this. My life as it has been planned is now wrecked beyond repair. I don't know whether this awful cloud can ever be lifted, whether I can ever be anything again among men. But I am a man. I have youth still, and strength and inspiration. When I can hold up my head

among men and when I have won back their respect, it may even be a meed of their admiration, I shall humbly sue for that you now so splendidly offer, but until that time I am nothing to you and you are free."

There was a finality in his tone which the woman recognized. She could as well break it down as batter a stone wall with her naked fist. She looked at him a long time.

"Very well," she said at last, "unless I shall be your wife I shall be the wife of no man. I shall wait confident in the hope that there is a just God, and that He will point out some way."

"And if not?"

"I shall die, when it pleases God, still loving you."

"And being loved," he cried, sweeping her to his heart, "until the end."

XVI

THE UNACCEPTED RENUNCIATION

THE doctor and the officers of the law now entered the outer office. Reluctantly the woman drew herself away from the man's arms, which were as reluctant to release her. In spite of the brave words that had been spoken by the woman the man could only see a long parting and an uncertain future. He realized it the more when old Colonel Illingworth entered the room in the wake of the others. After he had recovered himself he had hurried to the station in time to catch the next train and had come to New York, realizing at once where his daughter must have gone; besides his presence was needed in New York in view of the catastrophe.

He had brushed by the reporters, refusing to listen to them. Not anticipating what he saw as he entered the private office, the color faded from his face as he became aware of the big, prostrate, inert figure bending over the desk. It came again into his cheeks when he saw his daughter.

"My father is dead," said Meade as the doctor and the officers of the law examined the body of the old man. The son had eyes for no one but the old Colonel. "The failure of the bridge has broken his heart; my failure, I'd better say."

"I understand," said Illingworth. "He is fortunate. I would rather have died than have seen any son

of mine forced to confess criminal incompetency like yours."

"Father!" protested Helen Illingworth.

"Helen," said the Colonel sternly, "you have no business to be here. You heard what I said when you left me. But you are my daughter, my only daughter. I was harsh, perhaps, and hasty. I came to fetch you. Are you coming with me or do you go with this man—this incompetent—upon whose head is the blood of the men who went down with the bridge, to say nothing of the terrible material loss?"

"Father," said the girl with a resolution and firmness singularly like his own. "I can't hear you speak this way, and I will not."

"Do you go with him or do you not?" thundered the Colonel.

It was Meade who answered for her.

"She goes with you. I love her and she loves me, but I won't drag her down in my ruin."

"It is he who renounces and not I," said the woman. "I am ready to marry him now if he wishes."

"I do *not* wish," said the man.

And no one could ever know how hard was the utterance of those simple words.

"I am glad to see honor and decency are in you still," said the Colonel, "even if you are incompetent."

"If you say another word to him I will never go with you as long as I live," flashed out Helen Illingworth.

"I deserve all that he can say. Your duty is with him. Good-by," said Meade.

"And I shall see you again?"

"Of course. Now you must go with your father."

Helen Illingworth turned to the Colonel.

"I shall go with you because he bids me, not because——"

"Whatever the reason," said the old soldier, "you go." He paused a moment, looking from the dead man to the living one. "Meade," he exclaimed at last, "I am sorry for your father, I am sorry for you. Good-by, and I never want to see you or hear of you again. Come, Helen."

The woman stretched out her hand toward her lover as her father took her by the arm. Meade looked at her a moment and then turned away deliberately as if to mark the final severance.

With bent head and beating heart, she followed her father out of the room. There he had to fight off the reporters. He denied that his daughter was going to marry young Meade. She strove to speak and he strove to force her to be quiet. In the end she had her way.

"At Mr. Meade's own request," she said finally, "our engagement has been broken off. Personally I consider myself as much bound as ever. I can say nothing more except to add that my feelings toward Mr. Meade are unchanged. If possible they are enhanced, but in deference to his wishes and to my father's——"

"Have you said enough?" roared the Colonel, losing all control of himself at last. "No, I will not be questioned or interrupted another minute. Come."

He almost dragged the girl from the room.

Within the private office the physician said that everything pointed to a heart lesion, but only an autopsy would absolutely determine it. Meanwhile the

law would have to take charge of the body temporarily. It was late at night before Bertram Meade and old Shurtliff were left alone. Carefully seeing that no one was present in the suite of offices Meade turned to Shurtliff.

"You know the combination of the private safe?"

"Yes, sir."

"Open it."

The old man went to the door of the safe and discovered that it was not locked.

"It's open," he said.

"Get me that memorandum I wrote to my father. You know where he kept it."

"Yes, sir, separate from the other papers concerning the International, in the third compartment." He turned the big safe door slowly. The third compartment was empty. "It's gone," he said.

Meade looked at him sharply.

"The plans are there?"

"Yes, sir, in the other compartment just above it."

"Look them over."

"It's not here, sir," answered Shurtliff, making a bluff at going rapidly through the papers.

Meade went to the safe, a small one, and examined it carefully and fruitlessly. His letter was not there with the other papers, where it should have been if it were in existence. It was not anywhere.

"Father told me he was going to destroy it, but from indications he let drop I rather thought that he had changed his mind and was keeping it to have some fun with me when the bridge was completed," he said at last.

"Yes, sir, that was his intention. In fact, I know

he did not destroy it at first. He told me to file it with the plans."

"And did you?"

"I did."

"Where is it, then?"

"I don't know, sir."

"Shurtliff, you knew my father better than anyone on earth, didn't you?"

"Yes, sir, and loved him."

"Do you think he is the kind of man who would relieve himself at my expense, or at anybody's?" Meade almost shouted the words at the secretary.

"No, of course not."

"Where is it, then?"

"I don't know, sir. On second thoughts he must have destroyed it later. I haven't looked in this compartment for weeks."

"Well, it couldn't be anywhere but here unless it is in his desk at home. I'll look there and you search the office here. When it is found it must be destroyed. You understand?"

"I understand; trust me, Mr. Meade."

"I'll never forget the lie you told to back me up, Shurtliff. I can see you loved him as much as I."

"No one will ever know the truth from me, sir. You have saved your father's name and fame."

"I couldn't save his life, though."

"No, but what you saved was dearer to him than life itself."

"I think we had better search the office now. I wouldn't have that paper come to life for the world," said Meade.

Shurtliff was the most orderly of men. The care of the old engineer's papers and other arrangements had devolved upon him. The search was soon completed. The letter could not be found, and it never occurred to Meade to search Shurtliff!

"I guess he must have destroyed it," said the young man, "but to be sure I will examine his private papers at home. Good-night. You will be going yourself?"

"In a few minutes, sir."

"Come to me in the morning after the autopsy and we will arrange for the funeral," said the younger man as he left the office.

Shurtliff waited until his footsteps died away in the hall. He waited until he heard the clang of the elevator gate. Even then he was not sure. He got up and in his cat-like way opened the door of the office and peered down the hall. It was empty. He stood in the door waiting, while the night elevator made several trips up and down without pausing at that floor. He sat down at the dead man's desk. From his pocket he drew forth a packet of papers.

There were three of them. The letter the young man had written to his father, with the plan and the last note the old man had written to the papers. Shurtliff had not delivered them. He could not make up his mind to do it. He had correctly forecasted what Bertram would attempt to do. He had not gone near the *Gazette* office. He had withheld these papers from the press. He had said nothing about them to anyone, in the hope that he and the young man could persuade the father to silence before the irreparable admission became known. And finally a Power greater than he and

the son together could exercise had sealed the old man's lips forever.

In his hands the devotee held the fame and the honor of the dead man he had so loved. What that dead man would have had him do he knew beyond a shadow of a doubt. He had not done it. He could not do it now. He had disobeyed. He had lied. He had a keen conscience, too, but the devotional habit of a lifetime was not to be altered for any other man. Meade could live it down. Shurtliff had lived down his failure. There would be some way. The young man was alive, he could fight. The old man was dead. The secretary would better destroy the papers.

He struck a match, held it to the two letters and the plan and then, as the paper broke into a tiny flame, he threw the match aside and crumpled it out in his hands. The well-remembered face of the dead man, the recollection of his commands, forbade him. He did not have to give up those papers but he could not destroy them. He put them back into the pocket of his coat and bent his head over the desk, his left arm extended across it and clenched just in the last position of the man he loved. He wished that he could die, too, and follow after, faithful servant and friend that he was—or was he traitor and recreant after all?

XVII

THAT WHICH LAY BETWEEN

THERE were no legal proceedings, of course, that could be brought against the dead engineer or his son, although there were many inquests at the bridge. The cause of the failure was clear. Man cannot be punished in law for honest errors in judgment. It was recognized by everyone, whose opinion was worth considering, that the disaster had resulted from a mistake which any engineer could have made. As a matter of fact there was no experience to guide the designers. There never had been such a bridge before. Certain elements of empiricism had to enter into their calculations. They had made the plan after their best judgment and it had failed. They could be blamed, censured, even vilified as they were in the press, but that was the extent of their punishment; of Bertram Meade's punishment, rather, because Rodney and the other reporters had made much of his assumption of the blame. There might have been a doubt of it, engineers at least might have suspected the truth, but the evidence of Shurtliff put it beyond reasonable doubt. The older Meade escaped lightly. Men could only point out his mistake in committing such responsibilities to so young a man. And his dramatic death in large measure disarmed criticism.

The bitter weight of censure fell entirely upon Bertram Meade. His ruin as an engineer was imme-

diate and absolute. He was the scapegoat. No one had any good to say of him except Rodney, who fought valiantly for his friend and classmate, at least striving to mitigate the censure by pointing out the quick and ready acknowledgment of the error which might have been ascribed to the dead man without fear of contradiction.

An effort was made by competitors and stock speculators to ruin the Martlet Bridge Company. By throwing into the gap their private fortunes to the last dollar and by herculean work on the part of their friends, the directors saved the Martlet Company, although its losses were tremendous and almost insupportable, not only in money, but in prestige and reputation. Colonel Illingworth came out of the struggle older and grayer than ever. He went through the fires in his effort to save the concern which had been the foundation of his fortune and in which he felt a greater interest than in anything else in life save his daughter. He had led his company, his battalion, and finally his regiment, on many a hard-fought field in the War, but no battle had ever been fiercer or called upon him for greater efforts than this. The terrific combat had left him almost broken for a time, and his daughter saw that it was not possible even to mention Bertram Meade to him, then.

She had a great sympathy, as well as a tender affection, for her father. Albeit of a different kind, it was almost as great and abiding as her sympathy and affection for her lover. She had seen Meade only once since that day he had taken her to his heart by the body of his dead father and then put her away.

The funeral of the great engineer had been strictly private. Only his confrères, men who stood high in scientific circles, certain people for whom he had made great and successful designs, a few others whose ties were personal, had been invited to the house for the services. The interment was in the little Connecticut town of Milford, in which the older Meade had been born, and from which he had gone forth as a boy to conquer the world.

Shurtliff, the clergyman, and a few of his father's oldest friends, accompanied the young engineer to the car that was to take them to that village. They rode with him to the quaint old cemetery and stood by while those last words that are said over the greatest and the weakest, over youth and age, over beauty and ugliness, over virtue and shame, over triumph and defeat alike, were uttered, and then at his wish they all went away. They felt deeply for the ruined young engineer, who bade them good-by and stood by the side of the grave with Shurtliff, while the men filled it in. The special car would take the others back to New York. Meade would come later at his own time.

"Shurtliff," said the engineer, after the mound had been heaped up and covered with sods and strewn with flowers and the workmen had gone, "I have left everything I possess in your charge. You have a power of attorney to receive and pay out all moneys; to deposit, invest, and carry on my father's estate. The office is to be closed and the house is to be sold. My will, in which I leave everything to Miss Illingworth, is in your hands. You are empowered to draw from the revenue of the estate your present salary so long as you live. If

anything happens to me you will have the will probated and be governed accordingly."

"Mr. Meade," said the old man, and he somehow found himself transferring the affection which he had thought had been buried beneath the sod on that long mound before him, to the younger man. He had loved and served a Meade all his life and he began to see that he could not stop now, nor could he lavish what he had to give merely on a remembrance, "Mr. Meade," he said, "you are not going to do yourself any hurt?"

"If you knew me as well as you knew my father you would not ask the question."

"I beg your pardon, sir, but we seem to be rather alone, you and I, in the world."

"Yes," said Meade.

"Well, forgive your father's old if humble friend, if he asks where you are going and what you intend to do?"

"I don't know where I shall go, or what I shall undertake eventually," said the man. "I'm going to leave everything behind now and try to get a little rest at first. Then, I shall try to make another place for myself in the world, if I can, and I'm going to do it without any of the advantages or disadvantages of the period of my life which ends today."

"And you will keep me advised of your whereabouts?"

"I shall see that you get news of my death if I die, Shurtliff, and if I do anything or become anything——"

"The world will advise me of that, you mean?"

"Perhaps—I don't know. One last injunction: you are not to tell anyone the truth."

"God forbid," said Shurtliff, "we have lied to preserve the honor and fame of him we loved who lies here."

"Don't render our perjuries of non-effect."

"I will not, sir. I haven't found that paper. I guess it was destroyed."

"I presume so. And now, good-by."

"Aren't you coming with me?"

"I want to stay here a little while by myself."

Shurtliff looked at the young man standing so strong and splendid by the grave of his father. He put out his hand. He never condemned himself so much before. He began to wonder if he had pursued the right course. He began to question whether he who lay beneath the sod would approve of his suppression of the truth; of the lie he had told to save the father's fame and honor and to back up the assertion of the son. No, on the whole, Shurtliff did not question that. He knew that if it were possible the older man would rise from his grave to assume the responsibility, to proclaim the younger man innocent. Well, Shurtliff would save his beloved chief in spite of himself.

He released the young man's hand, turned, and walked away. When he reached the road, down which he must go, he stopped and faced about again. Meade was standing where he had been. The old man took off his hat in reverent farewell.

Meade was not left alone. Beyond the hillside where his father had been buried rose a clump of trees. Bushes grew at their feet. A woman—should man be buried

without woman's tears?—had stood concealed there waiting. Helen Illingworth had wept over the dreariness, the mournfulness of it all. She had hoped that Meade might stay after the others went and now that he was alone she came to him. She laid her hand upon his arm. He turned and looked at her.

"I knew that you would be here," he said.

"Did you see me?"

"I felt your presence."

"And would that you might feel it always by your side."

The man looked down at the grave.

"That," he said with a wave of his hand, "lies between us, that and the ruined bridge."

"Listen," said the woman. "You are wrecking your life for your father's fame. A man has a right perhaps to do with his own life what he will, but, when he loves a woman and when he has told her so and she has given him her heart, did it ever occur to you that when he wrecks his life he wrecks hers, and has he a right to wreck her life for anyone else?"

"What would you have me do?" asked Meade. "Unsay those words I said? Put the blame on the dead, destroy in a breath that great record of achievement, that vast reputation, the honor of a great name?"

"Ah, but on this side is a woman's heart."

"Oh, my God," said Meade, "this is more than I can bear."

"I don't want to force you to do anything you don't want to do and you are not in any mood to discuss these things," she said in quick compassion. "Some day you will come back to me."

"If I can ever hold my head up among men, look them straight in the eye because I have enforced their respect, I shall come."

"I shall wait."

"The task before me daunts me. It is beyond human achievement."

"Even for love like mine?"

He stretched out his hands toward her over the grave.

"I don't know," he cried. "I dare not hope."

"With love like ours," she answered, "all things are possible."

"I can't bind you. You must be free."

"I shall be free, free to love you, free to work in my own way. No loyalty"—she pointed down—"to him binds me. My loyalty is all to you."

"But you must consider my wishes."

"No," said the woman boldly. "Have you considered mine?"

"It is just," he said slowly, turning his head.

"You are breaking my heart, but I shall live and fight on for love and you."

"God bless you."

"You are going away?" she asked at last.

"Yes."

"Where?"

"I don't know."

"You will write to me?"

He shook his head.

"I must break with everything. I must give you your chance of freedom."

"Very well," said the woman. "Now hear me. You can't go so far on this earth or hide yourself away so

cunningly but that I can find you and maybe follow you. And I will. Now, I must go. I left my car down the road yonder. Will you go with me? "

The man shook his head and knelt down before her suddenly and caught her skirt in his grasp. His arms swept around her knees. She yielded one hand to the pressure of his lips and laid the other upon his head.

" Go now," he whispered, " for God's sake. If I look at you I must follow."

She was great enough to heed his request, to understand his mood, and as the old secretary had done she walked across the grass and down the road. Her last long glimpse of him was of a bent figure bowed over a new-made grave on a wind-swept hill.

III

DAM

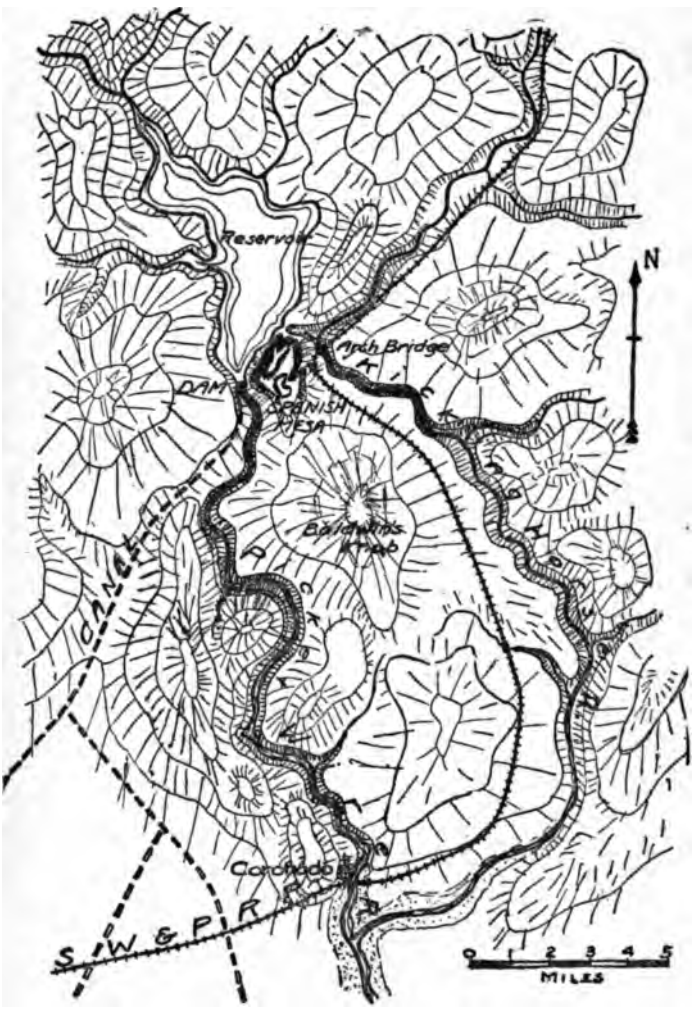
Reservoir
Arch Bridge
DAM
SPANISH MESA
Baldwin's Knob
Corchado
S W & P R R
N
0 1 2 3 4 5
MILES

XVIII

PICKET WIRE AND KICKING HORSE

THERE are no more beautiful valleys anywhere than those cut by the waters of primeval floods through the foothills of the great snow-covered Rocky Mountains. The erosions and washings of untold centuries have flung out in front of the granite ramparts a succession of lower elevations like the bastions of a fortress. At first scarcely to be distinguished from the main range in height and ruggedness these ravelins and escarpments gradually decrease in altitude and size until they turn into a series of more or less disconnected, softly rounded hills, like outflung earthworks, finally merging themselves by gradual slopes into the distant plains overlooked by the great peaks of the mountains.

The monotony of these pine-clad, wind-swept slopes is broken even in the low hills by out-thrustings of stone, sometimes the hard igneous rock, the granite of the mountains, more frequently the softer red sandstone of a period later, yet ineffably old. These cliffs, buttes, hills, and mesas have been weathered into strange and fantastic shapes which diversify the landscape and add charm to the country.

The narrow cañons in which the snow-fed streams take their rise gradually widen as the water follows its tortuous course down the mountains through the subsiding ranges and out among the foothills to the sandy,

arid, windy plains beyond. At the entrance of one of the loveliest of these broad and verdant valleys, a short distance above its confluence with a narrower, more rugged ravine through the hills, lay the thriving little town of Coronado.

Some twenty miles back from the town at a place where the valley was narrowed to a quarter of a mile, and separating it from the paralleling ravine, rose a huge sandstone rock called Spanish Mesa. Its top, some hundreds of feet higher than the tree-clad base of the hills, was mainly level. From its high elevation the country could be seen for many miles, mountains on one hand, plains on the other. It stood like an island in a sea of verdure. Little spurs and ridges ran from it. Toward the range it descended and contracted into a narrow saddle, vulgarly known as a "Hog-back," where the granite of the mountains was hidden under a deep covering of grass-grown earth, which formed the only division between the valley and the gorge or ravine, before the land, widening, rose into the next hill.

And people came from miles away to see that interesting and curious mesa, much more striking in its appearance than Baldwin's Knob, the last foothill below it. Transcontinental travelers even broke journey to visit it. The town prospered accordingly, especially as it was admirably situated as a place of departure for hunters, explorers, prospectors, and adventurers, who sought what they craved in the wild hills. There were one or two good hotels for tourists, unusually extensive general stores of the better class, where hunting and prospecting parties could be outfitted, and the high-living, extravagant cattle ranchers could get what they

demanded. Besides all these there were the modest homes of the lovers of the rough but exhilarating and health-giving life of the Rocky Mountains. Of course there were numerous saloons and gambling halls, and the town was the haunt of cowboys, hunters, miners, Indians—the old frontier with a few touches of civilization added!

What was left of the river, which had made the valley —and during the infrequent periods of rain too brief to be known as the rainy season, it really lived up to the name of river—flowed merrily through the town, when it flowed at all, under the name of Picket Wire. Singular lack of ability to bestow a poetic nomenclature upon nature might at first seem to be exhibited by the pioneer in this nondescript title. Not so the truth.

The pioneer was a poet unconsciously and filled with a spirit of romance. No man adventures, unless under the pressure of some inexorable necessity, into unknown lands as the pioneers did, without imagination, romance; vision, if you will. Plain though he may appear, the pioneer is the real dreamer of dreams. In the bleak and arid present, rough, wild, and unpromising, he can see the future, his the eyes of the seer and prophet. But when he tries to translate what he feels and sees, even in the simplest ways by exercising the privilege of Adam in naming the places he passes or stays by, he seems to lack expression to fit his soul.

For instance one of the most beautiful and romantic mountain streams, ever fresh and clear, ever dashing madly through one of the most stupendous cañons of Colorado, is known as the Big Thompson! Shades of Poseidon! What has water ever done to be so mis-

called? Another example is a great swelling peak, which strives to hold up its head when people point out that it is called Mount Bill Williams! Bill it might have stood, or Williams, but the combination!

Well, there were romance and appositeness about the silver stream that came dashing down from the snow-line, and in the springtime it might fairly be said to dash, called the Picket Wire. Into that very valley and at the base of that mesa in which the four centuries since had effected so little change had come, in the following of Coronado, for whom the town was named, a little party of Spanish explorers. Why they ascended the valley over which the mesa stood sentry and why they camped there rather than on the other side is not told in the tradition which alone sets forth their fate. That does not enter into this story. Suffice it, therefore, to say that a cloudburst in the hills, a thing which seems to have been as old as the hills themselves, wiped them out entirely. All unprepared, unblest, unshriven, they were swept away. Battered bodies, torn garments below the mesa told the story to those that hunted for tidings afterward. The valley was a place of horror. The river of lost souls, "*Rio de las Animas*," the Spaniards named it.

Somehow or other the name stuck to it until a restless French "coureur-de-bois," ranging far southward from the Great Lakes, came upon it and its name. Promptly identifying lost soul with purgatory he called it in turn "*La Rivière-de-la-Purgatoire*," the river of purgatory, as if to say, "All hope abandon, ye who enter here." In turn the name supplanted the other and abided.

When the cowboy followed the pioneer, knowing

neither French nor Spanish, he onomatopoetized the last appellation into "*The Picket Wire*," which was as near as he could come to the pronunciation of Purgatoire. The Spanish passed, the French disappeared, the cowboy and his like remained. Picket Wire it became and Picket Wire it will remain to the end of the chapter. There is no natural descent from lost souls to Picket Wire, though many lost souls may have been lost because of picket wires, but that is how it came to be. And the original disaster was not entirely forgotten either. It was perpetuated in the butte which became "Spanish Mesa." France, alas, coming between, had no memorial.

Well, not being a purgatorial Styx, after a time the valley and the ravine were both explored. The hills were tapped in fruitless search for precious metals, which were not found, and then it was abandoned to the hunter. When the railroad came the Picket Wire had been first studied in the hope of finding a practicable way over the mountains, but the ravine on the other side of the mesa had been found to offer a shorter and more practicable route. And, by the way, this ravine, taking its name from the little brook far down in its narrows, was known as the "Kicking Horse"; so named, no one knew why, by the Indians and freely translated by the white men. At any rate there was at least some association between Picket Wire and Kicking Horse, as the experienced know!

So the railroad ran up the ravine and the Picket Wire was left still virgin to the assaults of man. But the day came when it was despoiled of its hitherto long standing, unravished innocence. Axes were laid to the

roots of the trees, drills were driven into the rocks of the hills. Crashed down were the pines of the centuries, crushed were paleocosmic rocks with new and strange fires. Scarred and gashed and torn and ripped were the grass-covered hills. Huge expanses of yellow clay were revealed beneath the richer deposits whereon the sod had flourished.

Shouts of men, cracking of whips, trampling of horses, groaning of wheels, wordless but vocal protests of beasts of burden mingled with the ringing of axes, the detonations of dynamite. The whistle of engines and the roar of steam filled the valley. Under the direction of engineers, a huge mound of earth arose across its narrowest part, nearest a shoulder, or spur, of the mesa reaching westward. No more should the silver Picket Wire flow unvexed on its way to the sea. It was to be dammed.

All that the huge, hot inferno of baked plain, where sage brush and buffalo grass alone grow, needed to make it burgeon with wheat and corn was water. The little Picket Wire, which had meandered and sparkled and chattered on at its own sweet will was now to be held until it filled a great lake-like reservoir in the hills back of the new earth dam. Then through skillfully located irrigation ditches the water was to be given to the millions of hungry little wheatlets and cornlets, which would clamor for a drink. The fierce sun was no longer to work its unthwarted will in burning up the prairie.

The sage brush and buffalo grass were to go like the Indian before the march of civilization. Nature is more refined than man. The liquid that settled the

Indian was accurately known as "firewater." Incidentally, the same compound took a great many whites, not all the baser sort either. But that which was to sweep away the greasy sage brush and the coarse, rank grass, there being no longer any buffalo, was the water of life which came down from heaven. At least the snow caps of the range whence the Picket Wire flowed, and the great clouds that once in a long time swept over the peaks and dropped their burden on the bluff shoulders of the mountains, were as near heaven as it is possible to get on this earth.

With the promise of water on the plain beyond, Coronado sprang into sudden recrudescence of, newer and more vigorous life. In the language of the West it "boomed." The railroad had been a forlorn branch running up into the mountains and ending nowhere. Its first builders had been daunted by difficulties and lack of money, but as soon as the great dam was projected, which would open several hundred thousand acres for cultivation and serve as an inspiration in its practical results to other similar attempts, people came swarming into the country buying up the land, the price for acreage steadily mounting. The railroad accordingly found it worth while to take up the long-abandoned construction work of mounting the range and crossing it. Men suddenly observed that it was the shortest distance between two cardinal points, and one of the great transcontinental railways bought it and began improving it to replace its original rather unsatisfactory line.

The long wooden trestle which crossed the broad, sandy depression in front of the town, the bed of the ancient river, through which the Picket Wire and

further down its affluent, the Kicking Horse, flowed humbly and modestly, was being replaced by a great viaduct of steel. Far up the gorge past the other side of the Spanish Mesa another higher trestle had already been replaced by a splendid steel arch. A siding had been built near the ravine, a path made to the foot of the mesa, and arrangements were being made to run a local train up from the town when all was completed to give the people an opportunity to ride up the gorge and see the great pile of rock, on which enterprise was already planning the desecration of a summer hotel, the blasphemy of an amusement park!

XIX

THE NEW RODMAN

UP the valley of the Picket Wire one morning in early fall came a young man roughly dressed like the average cow-puncher from the ranches further north. He rode well, not with the carelessness and security and mastery of the cowboy, yet with a certain attention to detail and a niceness that betrayed him to the real rough-rider of the range. Just as the clothes he wore, although they had been bought at the same general store where the ordinary cattleman's outfit was purchased, were worn in a little different way that again betrayed him. One look into the face of the man, albeit his mustache and beard hid the revealing outlines of mouth and chin, sufficed to show that here was no ordinary cow-puncher.

He rode boldly enough among the rocks of the trail and along the rough road, which had been made by the wheels of the wagons and hoofs of the horses. Yet a close observer would have seen a certain hesitancy in his approach. He checked his horse from time to time and looked back. A bold man determined on a course does not check his horse and look back, yet no one who knew him could accuse this horseman of timidity. There was about him some of the quiet confidence begot of achievement, some of the power which knowledge brings and which success emphasizes, yet there were uncertainty

and hesitation, too, as if all had not been plain sailing on his course.

To be the resident engineer charged with the construction of a great earth dam like that across the Picket Wire, requires knowledge of a great many things beside the technicalities of the profession, chief among them being a knowledge of men. As the newcomer threw his leg over the saddle-horn, stepped lightly to the ground, dropping the reins of his pony to the soil at the same time, Vandeventer, the engineer in question, looked at him with approval. Some subtle recognition of the man's quality came into his mind. Here was one who seemed distinctly worth while, one who stood out above the ordinary applicant for jobs who came in contact with Vandeventer, as the big mesa rose above the foothill. However, the chief kept these things to himself as he stood looking and waiting for the other man to begin:

"Are you the resident engineer?" asked the newcomer quietly, yet there was a certain nervous note in his voice, which the alert and observant engineer found himself wondering at, such a strain as might come when a man is about to enter upon a course of action, to take a strange or perilous step, such a little shiver in his speech as a naked man might feel in his body before he plunged into the icy waters of the wintry sea.

"I am."

"I'd like a job."

"We have no use for cow-punchers on this dam."

"I'm not exactly a cow-puncher, sir."

"What are you?"

"Look here," said the man, smiling a little, "I've

been out in this country long enough to learn that all that it is necessary to know about a man is 'Will he make good?' Let us say that I am nothing and let it go at that."

"Out of nothing, nothing comes," laughed the engineer, genuinely amused.

Some men would have been angry, but Vandeventer rather enjoyed this.

"I didn't say I was good for nothing," answered the other man, smiling in turn, though he was evidently serious enough in his application.

"Well, what can you do? Are you an engineer?"

"We'll pass over the last question, too, if you please. I think I could carry a rod if I had a chance and there was a vacancy."

"Umph," said Vandeventer, "you think you could?"

"Yes, sir. Give me a trial."

"All right, take that rod over there and go out on the edge of the dam where that stake shows, and I'll take a sight on it."

Now there are two ways—a hundred perhaps—of holding a rod; one right way and all the others wrong. A newcomer invariably grasps it tightly in his fist and jams it down, conceiving that the only way to get it plumb and hold it steady. The experienced man strives to balance it erect on its own base and holds it with the tips of his fingers on either side in an upright position, swaying it very slightly backward and forward. He does it unconsciously, too.

Vandeventer had been standing by a level already set up when the newcomer arrived and the rod was lying on the ground beside it. The latter picked it up without

a word, walked rapidly to the stake, loosened the target, and balanced the rod upon the stake. As soon as Vandeventer observed that his new seeker after work held the rod in the right way, he did not trouble to take the sight. He threw his head backward and raised his hand, beckoningly.

"It so happens," he began, "that I can give you a job. The rodman next in the line of promotion has been given the level. One of the men went East last night. You can have the job, which is——"

"I don't care anything about the details," said the man quickly and gladly. "It's the work I want."

"Well, you'll get what the rest do," said Vandeventer. "Now, as you justly remarked, I have found that it is not considered polite out here to inquire too closely into a man's antecedents and I have learned to respect local customs, but we must have some name by which to identify you, make out your pay check, and——"

"Do you pay in checks?"

"No, but you have to sign a check."

"Well, call me Smith."

Vandeventer threw back his head and laughed. The other man turned a little red. The chief engineer observed the glint in his new friend's eye.

"I'm not exactly laughing at you," he explained, "but at the singular lack of inventiveness of the American. We have at least thirty Smiths out of two hundred men on our pay-roll, and it is a bit confusing. Would you mind selecting some other name?"

"If it's all the same to you," announced the newcomer amusedly—the chief's laughter was infectious—"I'm agreeable to Jones, or Brown, or——"

"We have numbers of all of those, too."

"Really," said the man hesitatingly, "I haven't given the subject any thought."

"What about some of your family names?"

"That gives me an idea," said the newcomer, who decided to use his mother's name, "you can call me Roberts."

"And I suppose John for the prefix?"

"John will do as well as any, I am sure."

"We have about fifty Johns. Every Smith appears to have been born John."

"How did you arrange it?" asked the other with daring freedom, for a rodman does not enter conversation on terms of equality with the chief engineer.

"I got a little pocket dictionary down at the town with a list of names and I went through that list with the Smiths, dealing them out in order. Well, that will do for your name," he said, making a memorandum in the little book he pulled out of his flannel shirt pocket. He turned to a man who had come up to the level. "Smith," he said—"by the way this is Mr. Claude Smith, Mr. Roberts—here's your new rodman. You know your job, Roberts. Get to work."

And that is how Bertram Meade, a few months after the failure of the great bridge, once again entered the ranks of engineers, beginning, as was necessary and inevitable, very low down in the scale.

XX

THE VALLEY OF DECISION

MUCH water had run under the bridges of the world and incidentally over the wreck of the International, since that bitter farewell between Bertram Meade and Helen Illingworth over the grave of the old engineer. Life had seemed to hold absolutely nothing for Meade as he knelt by that low mound and watched the woman walk slowly away with many a backward glance, with many a pause, obviously reluctant. He realized that the lifting of a hand would have called her back. How hard it was for him to remain quiet; and, finally, before she disappeared and before she took her last look at him, to turn his back resolutely as if to mark the termination of the situation.

Father, fame, reputation, love, taken away at one and the same moment! A weaker man might have sent life to follow. In the troubled days after the fall of the bridge, his father's death, the inquests, his testimony and evidence freely given, and that parting, something like despair had filled the young engineer's heart. Life held nothing. He debated with himself whether it would not be better to end it than to live it. He envied his father his broken heart. Singularly enough, the thing that made life of least value was the thing that kept him from throwing it away—the woman.

Striving to analyze the complex emotions that centered about his losses he was forced to admit, although

it seemed a sign of weakness, that love of woman was greater than love of fame, that in the balance one girl outweighed bridge and father. That the romance was ended was what made life insupportable. Yet the faint, vague possibility that it might be resumed if he could find some way to show his worthiness was what made him cling to it.

Of course he could have showed without much difficulty and beyond peradventure at the inquest over Abbott and the investigation into the cause of the failure of the bridge—unfortunate but too obvious—that the frightful and fatal error in the design was not his and that he had protested against the accepted plan, if only he had found the letter addressed to his father. But that he would never do and the letter had not been discovered anyway. He did not even regret the bold falsehood he had uttered or the practical subornation of perjury of which he had been guilty in drawing out and accepting and emphasizing Shurtliff's testimony.

There had been no inquest over his father's death. The autopsy had showed clearly heart failure. He had not been compelled to go on the witness stand and under oath as to that. Although, if that had been demanded, he must needs have gone through with it. Indeed so prompt and public had been his avowals of responsibility that he had not been seriously questioned thereon. He had left nothing uncertain. There was nothing concealed.

He had inherited a competence from his father. It was indeed much more than he or anyone had expected. He had realized enough ready money from the sale of certain securities for his present needs. The remainder

he placed in Shurtliff's care and a few days after the funeral, having settled everything possible, he took a train for the West.

The whole world was before him, and he was measurably familiar with many portions of it. He could have buried himself in out-of-the-way corners of far countries, in strange continents. These possibilities did not attract him. He wanted to get away from, out of touch with, the life he had led. He wished to go to some place where he could be practically alone, where he could have time to recover his poise, to think things out, to plan his future, to try to devise a means for rehabilitation, if it were possible. He could do that just as well, perhaps better, in America than in any place else. And there was another reason that held him to his native land. He would still tread the same soil, breathe the same air, with the woman. He did not desire to put seas between them.

He swore to himself that the freedom he had offered her, that he had indeed forced upon her unwilling and rejecting it, should be no empty thing so far as he was concerned. He would leave her absolutely untrammeled. He would not write to her or communicate with her in any way. He would not even seek to hear about her and of course as she would not know whither he had gone or where he was she could not communicate with him. The silence that had fallen between them should not be broken even forever unless and until—— Ah, yes, he could not see any way to complete that "unless and until" at first, but perhaps after a while he might.

He knew exactly where he would go. Dick Winters, another classmate and devoted friend at Cambridge, had

gone out West shortly after graduation. He had a big cattle ranch miles from a railroad in a young southwestern state. Winters, like the other member of the youthful triumvirate, Rodney, was a bachelor. He could be absolutely depended upon. He had often begged Meade to visit him. The engineer would do it now. He knew Winters would respect his moods, that he would let him severely alone, that he could get on a horse and ride into the hills and do what he pleased, think out his thoughts undisturbed.

To Winters, therefore, he had gone. He had an idea that his future would be outside of engineering. Indeed he had put all thought of his chosen profession out of his mind and heart, at least so he fancied. Yet, spending an idle forenoon in Chicago waiting for the departure of the western train, he found himself irresistibly drawn to the great steel-framed structures, the sky-scrapers rising gaunt and rigid above the other buildings of the city. He remembered that Chicago was the home of the tall building, that in it the first great constructions that were to make American engineering famous had astonished the world, and he took deep interest in comparing the older buildings with the newer.

Again the train was delayed and held up for half an hour just as it reached the Mississippi River. He left his seat in the dining-car, his dinner uneaten on the table, to go out and inspect the bridge during the half-hour that the "Limited" lay idle. The next day some enormous irrigation works in western Nebraska so engrossed his attention and aroused his interest that in spite of himself he stopped over between trains to see them. And these actions were typical.

Yet after every one of these excursions back into his own field, his conscience smote him. Was he never to get away from this engineering? Was there nothing else for him but brick and stone, steel and concrete, designs and plans and undertaking and accomplishment in the world? Because it was the thing that he must abandon and put out of his mind, engineering seemed the only thing he cared for. There would be no engineering on that ranch on the slopes of the range. He could settle the question there.

Winters was glad to see him. He and Rodney and Meade had been the warmest of friends. Of course Meade could not tell Rodney the truth on account of his newspaper connections, but he decided finally that he could and would tell Winters under assurance of absolute secrecy. For one thing the big cattleman had bluntly refused to credit his friend's first statements; and, when he at last heard the truth, he blamed him roundly while he appreciated fully the nobleness of his self-sacrifice. The clear-headed, practical Winters put it this way: Meade was capable of doing splendid service to humanity as an engineer and bade fair to be even greater than his father, yet for the sake of the fame of a dead man, to whom after all it would matter little, he had thrown away that splendid opportunity!

This was a new thought to Meade and a disturbing one. Unfortunately, as even Winters was forced to acknowledge, the suggestion came too late. The course had been entered upon. It would be cowardly to try to change it now. Indeed it would have been impossible with the disappearance of the written protests and notes. Even if Shurtliff had been willing, no one would

have believed a delayed retraction and explanation, and Shurtliff would not have been willing Meade well knew. Neither for that matter was Meade himself. He was glad that the affair had been settled and would not change it now even though Winters' rough-and-ready presentation of the situation disquieted him.

Winters, who saw how greatly overwrought and unstrung his friend was, contented himself with the assertion. He did not press the point or argue it with him. He rested quietly confident that matters would right themselves some way in the long run. He treated Meade exactly right. He left him to his own devices. He did not force his company upon him. Sometimes the engineer would mount a horse—and all at the ranch were at his disposal—and would ride away into the woods and mountains with a camping outfit. Sometimes he would be gone for several days, coming back white and haggard and exhausted but victor in some hard battle fought out alone.

Before Meade had left New York he had deposited a sufficient sum of money with one of the leading florists there and on every Saturday a box of the rarest and most beautiful flowers was delivered namelessly to Helen Illingworth. She knew the florist from whom they came but never questioned him. She divined that they came from Meade in the absence of any card. She did not make the slightest effort, however, to confirm that conclusion or find out how or why they were sent so regularly. She just took the flowers to her heart, wept over them, kissed them, and loved them; and every time they came she held her head higher.

One day there came to the ranch a letter to Winters

from Rodney, full of friendly chat and pleasant reminiscence.

"Meade has disappeared absolutely," wrote Rodney in closing. "Even Miss Illingworth, to whom he was reported engaged and upon whom I have called occasionally, says she does not know his whereabouts, although she confided to me, knowing my friendship for him, that a New York florist sends her flowers every week, which she knows could come only from him. Of course you saw in the papers his connection with the tragedy and failure of the International? I happened to be the man to whom he made the admission of the error in his calculations. Although his frank statement was corroborated by that of the older Meade's private secretary, I have never been able to believe it, neither does Miss Illingworth. I know Bert, and so does she. We can't accept even his own testimony. We have been working together to establish the truth, but with very faint prospects of success so far. There's some tremendous mystery about it. I have thought that maybe Meade might have come to you. If he has show him this letter and beg him to tell us the truth at any rate."

Winters passed the letter over to Meade without comment. The engineer read it with passionate eagerness. He was hungry for any news of Helen Illingworth. The flowers were being received. She had divined whence they came. That was something. And Rodney was calling upon her. A sharp pang of jealousy shot through him at that, although he knew there was no reason. Dear old Rodney! He could see his grave face, his disapproving manner, his air of unbelief, as he

had taken down Meade's words in the office that tragic day.

Of course, Helen Illingworth was not a recluse as he was. She mingled in society. She took up life with its demands. She entered into its pleasures and fulfilled its duties. He was jealous of everyone who might come in contact with her, but he knew the names of none except Rodney.

And they were suspicious of his avowal! That was balm to his soul. Of course Helen Illingworth was suspicious, but why should Rodney doubt his assumption of the blame? And they were working to establish his innocence. The thought disquieted him lest they should discover the truth in some way. And it gave him joy also. They would work despite any remonstrance from him. He thought of that protest to his father always with uneasiness. If he could only have found it and destroyed it himself he would have been happier. Could it be in existence somewhere? Would it turn up? Would they unearth it? Well, he had done his best for his father, yet he was glad those two disbelieved and were working for him.

Meade had been the most brilliant, Winters the most indifferent, Rodney the most persevering, of the trio at college. He remembered that well. His first thought was to forbid Rodney to do anything further, although how far his friend would respect his wishes he could not tell. Anyway, he did not have to decide that matter, because he could not say a word to him. To have allowed Winters to write would have betrayed his whereabouts. He was living with Winters under an assumed name of course. He had had his hair cut differently and had

grown a beard and mustache. He thought it would have taken a keen eye indeed to have recognized him with these changes.

In the end he handed the letter back to Winters, only charging him that if he wrote to Rodney he must not betray the fact that Meade was with him. He had plenty of time to think over the situation. He decided finally that so long as he had been born an engineer and trained and educated as an engineer and had worked as an engineer that an engineer he would have to be until the end of the chapter. He would go out and seek work, not such work as his ability and experience and education had entitled him to undertake, but under some assumed name he would begin at the very beginning, at the foot of the ladder as a rodman, if he could; and then he would work on quietly, faithfully, obscurely, praying for his chance. If it came he would strive to be equal to the opportunity; if it did not at least he would be engaged in honest work in an honest way.

It was a very humble programme, not at all promising or heroic or romantic, just a beginning. He would work on and wait. They say that all things come to him who waits. That is only half true. Some things come to him who waits sometimes. That is more nearly accurate. Well, he could think of no better plan. So he bade Winters good-by, swearing him again to secrecy until he should lift the ban against speech, and rode away. When he got to the little village on the Picket Wire below the dam he stopped a long time gazing at the long bridge, or viaduct, of steel that was replacing the old wooden trestle and carrying the railroad from the hills to the eastward over the river.

It was not such an undertaking as the lost International, still it was interesting engineering construction. It was work that would be intensely congenial, to which he was drawn almost irresistibly, yet he managed to hold himself aloof. The Martlet people were building this steel bridge and they had just finished the arch up under the mesa. A well-known construction company was building the great earth dam across the Picket Wire in the valley.

Meade's engineering life had been spent mainly out of the United States. He had never been connected with the Martlet and its employees until he had been associated with his father on the International. He could have gone among them with little danger of immediate discovery, since most of the men he had known had gone down with the bridge, but he decided not to do so. The work on the dam would be simpler and he would have less opportunity to betray himself and it would give him more chance to work up in a plausible and reasonable way. Besides, if Colonel Illingworth came on to inspect his bridge, as he would probably do, Meade would have to leave before his arrival. The dam would be safer. No one would ever think of looking for him there. And no one would ever recognize in the rough-bearded workman the clear-cut, smooth-faced young engineer of other days.

The dam was twenty miles up the valley. Yes, he would be less apt to be observed working there than on the bridge. Yet as he recalled that private car and that it might come there, he realized that she might be on it. His heart leaped even as it had leaped at the sight of the viaduct then building, as it had quivered to the

familiar rat-tat-tat of the pneumatic riveters and the clang and the clash of the structural steel. But what was the use? He would not dare trust himself to look at her even from a distance. No, it was the dam that best suited his purpose, so he turned away from the bridge and rode up the valley. There he was fortunate in falling into a position, as has been set forth.

XXI

MARSHALING THE EVIDENCE

FOR all her sweetness and light, Helen Illingworth was dowered with intense energy and a powerful will. What she began she finished, and she was not deterred from beginning things by fears of consequences. When she had so powerful an incentive as the rehabilitation of her lover, the resumption of their engagement, and their prospective marriage there was nothing that could stop her. She supplemented a man's analytical powers with a woman's intuition in her work.

She was convinced that Meade had not told the truth in that famous declaration in his father's office. She respected him for his desire to shield his father's name and fame even at the expense of his veracity, albeit she would not have been a woman if she had not resented the fact that in so doing he had sacrificed her happiness as well as his own. Indeed, perhaps, she could not have borne that separation and delay had it not been for the consciousness that in any event her father's hatred of the very name of Meade would have forced her to choose between the two men, and womanlike, she shrank from the necessity of such a decision. Time would be her ally. She was the more content to wait, therefore.

The question whether Meade, Junior, was the more responsible or even responsible at all was more or less academic to Illingworth. He would have had nothing further to do with either of them if both were living,

and certainly not with the younger survivor. Really from the point of view of wealth and station a marriage between his daughter and Meade might have been considered a condescension on her part, in her father's eyes at least. Nothing could have justified such an alliance from a worldly standpoint but Meade's continued and unequivocal success.

Rightly had the old man made the match dependent upon the successful completion of the bridge. He congratulated himself on that wise decision. He tried to believe that if it had come to a final choice the daughter, in spite of the fact that such is the habit of women in the experience of life, would not have given up age and her father for youth and her lover. Indeed she was too genuinely devoted to her father to do that except as a last resort. She cherished the hope first, that Meade could re-establish himself—she had too sweeping a confidence in his character and capacity to doubt that—and second, that it could be shown that he had not been responsible for the failure of the bridge. She was more and more convinced that his assumption of the blame had been dictated by the highest of motives and instead of being a fit subject for censure and condemnation he merited admiration and applause. She hoped with her woman's wit to prove this eventually, perhaps in spite of her lover, and to this end she applied herself assiduously to solve the problem.

To her, at her request, came Rodney. Now the reporters had dealt very gently with Helen Illingworth. They had made no announcement of the engagement or of its breaking at her father's earnest request. There was no necessity of bringing her into the bridge story,

although it would have added a dramatic touch to their narratives. They had held a brief conference before they separated and at Rodney's suggestion they had agreed to leave her out of it. There was enough without her. None of the yellow journals had suspected the broken engagement since it had never been announced, and the loyal young fellows kept their compact religiously as they had cheerfully promised themselves they would do.

Not that Helen was in the least ashamed of the engagement. Her inclination when she found it had not been referred to in any of the reports or discussions of the catastrophe had been to avow it. But upon reflection she saw it would only have caused further talk, it would have annoyed her father beyond expression, it would not have helped Meade any, and it might hamper her in her work. She realized that she had Rodney to thank for this omission and after she had time to collect herself she asked him to call upon her. He was very glad to come.

"I sent for you, Mr. Rodney, on account of Mr. Bertram Meade," she began, after thanking him for his courtesy toward her the day the older Meade died and thereafter.

"I divined as much, Miss Illingworth."

"I want you to help me."

"I shall be delighted to do so for three reasons."

"And those are?"

"First, for your own sake. I know, you will pardon me, how deeply interested you are in Meade's rehabilitation. Second, because I believe that he was not telling the truth, that he is shielding his father. Third, be-

cause he was my dearest friend at college. We were classmates and his happiness and future are as dear to me as my own."

"Mr. Rodney," returned the woman, flushing a little, "you know of course that we were engaged. You heard me say it. I know that it was due to you that the engagement was kept out of the papers. Personally, I should have proclaimed it from the house-tops but for my father. He considers it broken."

"And you? Forgive me, Miss Illingworth!"

"It is as binding upon me as it ever was, although Mr. Meade gave me complete and entire release before he went away."

"I suppose so. That would be like him."

"He said he would not link my life and its possibilities with a wrecked career like his and, although I told him frankly that nothing could be worse than separation, he persisted and——"

"I understand," said Rodney gravely. "Indeed as a man of honor he could do no less."

"You are all alike," said the woman a little bitterly. "Your notions are supreme. You may break hearts, you may ruin lives, you may sacrifice love and your best friend so long as you preserve those notions of honor intact."

"And yet it is just because we preserve those ideas of honor, which you call our notions, that your heart breaks in parting. If we weren't honorable men you wouldn't care for us at all."

"Yes, I suppose that's it. Well, I do care very much, as you understand. I may as well be frank with you. My father, of course, is bitterly antagonistic to

Mr. Meade. He won't even allow his name to be mentioned."

"One can hardly blame him for that, Miss Illingworth. The failure of the bridge seriously embarrassed the Martlet Bridge Company, and it is a great handicap for them to overcome in seeking any further contracts."

"I know it was only my father's private fortune and that of all the others, that kept the works from going under."

"Everybody knows that and honors your father and his associates for their sacrifices."

"But I did not summon you here to discuss the affairs of the Martlet Bridge Company," said Helen, "interesting though they may be, but to see if by working together there was not some way by which we could prove that Bertram Meade has assumed the blame to save the honor and fame of his father."

"You believe that, Miss Illingworth?"

"I am sure of it."

"So am I," said Rodney quickly.

"Thank God," cried the girl a little hysterically, surprised and almost swept off her feet by this prompt avowal by one who, though young, was already an authority in the literature of engineering. "Why do you say that? What evidence have you?"

"Unfortunately," answered Rodney, "I haven't any tangible evidence whatever, but I know Bert Meade as few people know him, Miss Illingworth, perhaps not even you," he went on, in spite of her unspoken, but vigorous protest at that last statement, as she shook her head and smiled at him. "And there are several little cir-

cumstances that make me feel that he could not have been to blame. Have you any ground for your conviction? "

"Probably even less than you have and yet I, too, know him. You were four years at college with him, I was five minutes in his arms," she said boldly, "on the bridge. He saved my life there. I have never told anyone before." Rapidly she narrated the incident. "This is what made him speak, but this is beside the point and does not interest you," she concluded graphically.

"On the contrary it interests me intensely. It adds the least touch of romance to the tragedy. If I were a writer of fiction instead of handling the dry details of engineering operations, what an opportunity is here presented!"

"But you will respect my confidence? "

"Absolutely, my dear young lady. You may speak with perfect assurance."

Helen Illingworth looked into the plain, homely, but strong, reliable face of the man and dismissed any thought of reserve from her mind.

"Let us place," she began, "the little circumstances upon which our intuitions are based, if intuitions are ever based on anything tangible, together. Perhaps the sum of them may yield something."

"The suggestion is admirable," assented Rodney, "and as I knew him first and longest I will begin. Perhaps it would be well, too, to take down our evidence and then transcribe the notes so that we may consider them at leisure, getting an eye view as well as an ear view of them."

"That will be an admirable plan, but how?" asked the girl eagerly.

"I happen to have mastered shorthand and I can take down my words and yours."

He drew out a note-book, pad, and pencil from his pocket and sat down at the nearest table.

"Now, in the first place," he began, writing and speaking at the same time—it was a little difficult at first being so unusual, but as he spoke slowly and thoughtfully he managed it—"point one is Meade's absolutely unbounded devotion to his father. The old man was not always right. His theories and propositions were arguable and some were controverted. The boy was as clear as a bell on most things, but I recall that he would maintain his father's propositions tenaciously, determinedly, long after everybody, perhaps even the old man himself, had been convinced of their fallacy. Engineering is in Meade's blood. He is the fifth of his family to graduate at Harvard and three of his forbears were engineers, his grandfather noted and his father world-famous. He fairly idolized his father. The affection between them was delightful. The king could do no wrong. Meade was quick-tempered and not very receptive to criticism, but he would take the severest stricture from the old man without a murmur."

"Here we have," said the woman, who had listened with strained attention, "an early devotion to a person and an unbounded respect for his attainments."

"Exactly."

"Go on."

"The next point is, Meade was inordinately proud of

his family reputation, especially in the engineering field. Of the two of the line who were not engineers, one was a soldier and a distinguished one, but his career had little interest for Meade. I have heard him say that there had been a steady, upward movement in his family, that had reached its culmination in his father. He hoped to be a good, useful engineer, but he never dreamed of going any higher or even approaching the altitude of the other man."

"It was a sort of fetish with him, then, wasn't it?" asked the woman as Rodney stopped again.

"You have hit it exactly. His love for the man, his admiration for the engineer, which sometimes blinded him, and his pride in his father's career as typifying his family, were unbounded."

"You have established a motive for any sacrifice: love, respect, pride!"

"That's the way it presents itself to me, Miss Illingworth. I know thoroughly the quixotic, impulsive, self-sacrificing nature of the man. I know that he would have done anything on earth to save his father, even at the sacrifice of his own career, and since I have seen you I can realize how powerful these motives must have been."

Rodney said this quite simply, as if it were a matter of course, rather than a compliment, and bluntly as he might have said it to a friend and comrade, and Helen Illingworth understood and was grateful.

"It has been a grief to me that I weighed so little in comparison," she said simply.

"I shouldn't put it that way exactly," observed Rodney carefully. "You see even if it could be shown

that it was the old man's fault entirely the young one would still have to share some of the blame."

"You mean he should have foreseen it and pointed it out?"

"Yes."

"I think he did."

"I think so, too, but if he did foresee it and point it out, he should not have allowed the older man to overawe him or force him to accept what he believed to be structurally unsound. And Meade realized that he was practically done for when he gave you up, unless he wished you to share his disgrace, and in the face of every conceivable opposition a woman would have to meet. I don't know whether he reasoned it out exactly in this way. I don't think he had time to argue the case, the shock was so swift and sudden, but as soon as he did see the situation he discovered that you were lost anyway, except of the charity of your affection, which he could not accept, and that he could save his father. This may all be the wildest speculation, but this is the way it presents itself to me."

"And to me," said Helen, "but before we go any further, let me say I should rather be his wife, shamed, humiliated, heartbroken, blameworthy though he may be, than enjoy any other fate or fortune."

"If anyone did love Meade for himself that is the kind of affection his qualities merit and would evoke in the mind of a discerning woman."

"Thank you. Will you go on, now?"

"Of course you know that what we have said is not evidence. It is all assumption, perhaps presumption."

"It's as true as gospel," said the girl earnestly.

"To you and to me, yes. Well," he continued, "I remember that Meade and I were talking just before he went to Burma three years ago about a new book by a German named Schmidt-Chemnitz, in which certain methods of calculations were proposed for the design of lacings. They were empiric, of course, because there haven't been enough experiments on big members like those in the International from which to deduce the true laws. You know it was the lacings of one of the compression members of the cantilever that gave way."

"Wait a minute," said Helen.

She went to her desk, opened a drawer, extracted therefrom a paper.

"Look at this," she said. She put her finger on the little sketch Abbott and Curtiss had discussed on the observation platform of the private car. "These are lacings, aren't they?"

"Yes," said Rodney, studying the sketch with deep interest. "Where did you get this?"

"Presently," said Miss Illingworth. "Go on with your account."

"Well, Meade and I got into a hot discussion over some of Schmidt-Chemnitz's formulas. I maintained that they were wrong. He took the opposite view. He was right. He was so interested in the matter that after we separated he wrote me a letter about it, adding some new arguments to re-enforce his contention. The other day I made a careful search among my papers and by happy chance I found the letter. I was half-convinced by his reasoning then, although the matter was dropped. I am altogether convinced now. His argument is very clear. I have examined since then the plan

and sketches for that bridge. The calculations did not agree with those of Schmidt-Chemnitz. His methods were not used. Meade could not have forgotten the matter. I am morally certain that he made a protest to his father, probably in writing, then allowed himself to be persuaded by his father's reasoning. As a matter of fact, I suppose that Bertram Meade, Senior, was a greater authority on steel bridge designing than even Schmidt-Chemnitz. Well, sometimes, the smaller man is right. We know now and Bertram Meade, Senior, would admit it if he were alive, that Schmidt-Chemnitz was right, and we can make a good guess that young Meade did not let it pass without a protest."

"Mr. Rodney, it's wonderful."

"Well, that's not all. There was not a little bit of hesitation in Meade's assumption of the blame, not a person who heard it doubted it apparently. I have sounded them all carefully, except myself."

"And me."

"It was a splendid piece of dramatic acting,—one hates to call such a sacrifice by such a name—but that is what it was."

"My thought exactly," said the woman. "Is that all?"

"Not yet. I was the first man to see the older Meade except his son and Shurtliff."

"Oh, Shurtliff!"

"We'll come to him presently. It was obvious that the older Meade had been writing. I don't know whether the others noticed it, but it is my business to take in even inconsiderable details. The pen was still between his fingers. His hand was constricted and the pen had

not dropped out, in fact I myself took it out and laid it on the desk."

"His last conscious act was to write something, therefore?"

"Yes, for confirmation I ascertained that there were ink-stains on his fingers."

"What did he write and to whom?"

"I don't know. I can only guess."

"What do you guess?"

"The assumption of entire responsibility and the exculpation of his son, probably to some paper."

"From the same motives that prompted Bert?"

"No, because it was true. But that is only an assumption, although not altogether without further evidence."

"And what is that?" asked the woman eagerly.

She had sat down opposite Rodney at the table and was leaning toward him. Her color came and went, her breathing was rapid and strained under the wild beating of her heart.

"The blotter on the desk. I examined it at my leisure. It had been used some time. I went over it with a magnifying glass. Meade, Senior, had evidently written a letter. I found the words 'fault is mine.' I have the blotter in my desk. The word 'fault' is barely decipherable, 'is' can be made out with difficulty, but 'mine' is quite plain. I am familiar with the older Meade's handwriting, and though this is weaker and feebler and more irregular than was his custom—ordinarily he wrote a bold, free hand—this is unmistakably his. Of course no one can say that he wrote any letter. This is piling assumption upon assumption

and, furthermore, there is no evidence of any signature having been written beneath it."

"But there are signatures on the blotter?"

"Yes, one in particular, very clear."

"It might have been added later."

"Of course."

"Is that all?"

"There is one more bit of evidence."

"What's that?"

"The sheet of paper on which the design computations for the compression chord members appear was not with the other plans and tracings of the bridge."

"How do you know?"

"These plans were taken over by the Martlet Company after Meade's death and Mr. Curtiss and I examined them. We found that sheet missing."

"It's wonderful!" cried the girl, her eyes shining. "I was convinced before, but, if I had not been, you would have persuaded me beyond a doubt."

"I have persuaded myself, too," said Rodney. "But there is not a single thing here that would justify any publicity even if we were prepared to go against Meade's obvious desire. As I say, it is all assumption. No one could prove it."

"You are wrong," said the girl. "One person can prove it."

"Who is that?"

"Shurtliff."

"I wondered if that would occur to you."

"Of course. You think that Meade, Senior, wrote a letter assuming the blame because it was his. I have

no doubt in the world now that Bertram Meade had made his protest in writing. Perhaps he indorsed it on the missing sheet," continued the woman, making bold and brilliant guesses. "Or maybe he wrote a letter that was attached to the sheet that we lack, and Mr. Meade got it out of the safe and wrote his letter and attached it with Bertram's protest to the missing drawing and gave them to Shurtliff and told him to take them to the papers. You know Shurtliff said that Meade declared he would assume the blame and he told the reporters so. Shurtliff has, or he knows who has, the missing paper."

"But what motive would the secretary have for such concealment?"

"He idolized the older Meade. Mr. Curtiss told me about him. A failure himself when he was a young man, Mr. Meade had faith in him and offered to promote his engineering efforts, but the man preferred to attach himself, personally, to Mr. Meade and so he became his private secretary. By his own showing he had been with the dead man on that afternoon. He has the papers."

The woman rose to her feet as she spoke with fine conviction.

"I believe you are right," said Rodney, leaning back in his chair and staring at her through his glasses. "If we can only make him speak——"

"We can."

"How?"

"I don't know, but that shall be my task."

"But where is he?"

"Working for my father."

"What do you mean?"

"I mean that I suspected him from the first, and as there was an opening for a private confidential man, who understood engineering—a vacancy made by the promotion of my father's private secretary—I prevailed upon him to give the position to Shurtliff. Father hates the name of Meade, but he worships efficiency and he knows that Shurtliff is the very incarnation of the particular kind of ability that he desires, so he is with my father constantly and I have him always under my eye. When we go away in the car, he goes along."

"What are you going to do?"

"Win his confidence, his affection if I can, appeal to him, and——"

"By Jove," said Rodney, "I believe you can do it. You can't drive that old man."

"I know it," said the woman.

"You haven't told him that you thought it was his fault?"

"No. Now, to return to that picture and that plan. I can remember the day Bert saw it first."

"When was it?"

"The morning after the night I nearly fell off the bridge."

"Yes?"

"It was on the table on the observation platform where the men had left it. I had gone to the door to tell the attendant that Mr. Meade would breakfast with us; when I came back he was staring at it like one possessed. We had some conversation about it. I remember every word." She repeated it verbatim. "It

was not so much what he said, but the way he looked; strained, one might say, alarmed. I puzzled over it a good deal and as we had "—she stopped and smiled— "we had other things to think of, I didn't dwell upon it until afterward. Mr. Rodney, he knew that lacing was weak. There was relief in his look and voice when he found that Curtiss and Abbott were both satisfied. If he knew it was weak, or if he thought it might be, he is the kind of man who would have said so. If we can find that missing sheet, if we can make Shurtliff tell, we can establish his innocence beyond peradventure."

"We certainly can and, if we do, it will be through you."

"Don't forget your own part, Mr. Rodney."

"I couldn't do anything with a man like Shurtliff. You can. You can win his devotion, you can let him see how much the reinstatement of Bert Meade in honor again means to you. You can do it."

"Meanwhile you will help me, won't you?"

"In any way, in every way. Do you know where he has gone?"

"I haven't the slightest idea. He might be in Africa, or South America, or out West, or up North. Do you see those flowers?"—she pointed to a great bunch of American Beauty roses, which had been forced for her apparently, and which she had received on that very day—"Dards, you know the Madison Avenue florist, sends me a box of magnificent blossoms, roses, violets, orchids, always different, every week. They speak to me of him."

"Have you ever tried to trace them?"

"No. I know whence they come and that is all. We will hear from him some day, somewhere, somehow. Meanwhile, we will work, work, work!"

"Miss Illingworth," said Rodney, rising, "I will transcribe this conversation and send you a copy. We will study it. Meanwhile if anything occurs to me I will communicate with you."

"And I with you."

"And you will allow me to say before I go that since I have had this conversation with you I do not see how even love for his father or his family name would have led Meade to do it."

"Don't say anything against him," said Helen Illingworth quickly. "He was mad with anxiety, shame, regret. Whatever he did I love him just the same."

XXII

WORKING UP

THE autumn went by as a dream. Winter, warm and mild in that far southern clime, was at hand before Meade realized it. An ordinary engineer of half the ability of Bertram Meade so suddenly reduced to the ranks would have chafed against the position of subordination and would have resented the humble duties with which he was charged. But Meade was happy to be following, even in this extremely modest way, the profession that he loved. And he did his unimportant work with zeal and care. It is not much to say, but he was the most efficient of the junior engineering force on the dam. That compensated for another not quite so admirable fact. He did not mingle with the men. They thought him reserved and unfriendly and but for his unfailing courtesy to everybody and his obvious expertness he would perhaps have become unpopular. Of course, many of the men were far beneath him socially and intellectually, but there was a spirit of democracy among the workers on the dam. Except for the foreigners and others of the manual laborers, rank and station were more or less laid aside after hours. Even Vandeventer himself put on no airs.

It was not because Meade was unsocial that he kept to himself, not at all. From his own galvanized iron quarters, he used to stare longingly at the men grouped around the big camp fires, for the nights were growing

chill, smoking and laughing, exchanging experiences and telling stories. Nothing would have pleased him better than to have joined in and he could have told stories and related experiences that would have been unique even in that gay crowd of young adventurers. But he did not dare. He feared to betray himself. What he wanted above everything was to preserve his incognito. It would be fatal to his chances of ever working up to anything worth while if they found out who he was.

And he had a tremendous pride to sustain him. They respected him now. As a matter of fact they put his withdrawal of himself down to vagaries of temperament or causes they could not imagine and they grew rather to like him even as they left him alone. And a few of the men of the humbler sort to whom he had been kind on occasion and helpful, were stoutly devoted to him. Little indications gave him the feeling that Vandeventer had his eye on him and that if it were possible he would get a chance. He was not moody or morose. He was just afraid, afraid he would be found out, questioned, pitied. So when the others gathered together in jolly fellowship after working hours Meade, perforce, wandered away alone.

The idleness of an aimless life did not appeal to him even in his off-duty periods. Doing nothing had no attraction. He could not get relief that way. Even rambling alone about the hills would not serve. So quick and active a man, so vigorous and buoyant a spirit, so strong a body and mind were not calculated for aimless wandering.

Meade was a very accomplished engineer indeed.

There was no branch of the art about which he did not know a little, although hydraulics and structural steel were the things that most appealed to him. He got relief in the duality of his affections for these branches of his profession. Neither one of them ever palled on him because he did not work monotonously at either of them. He had a natural instinct for topography, and instead of purposelessly strolling about the country, he made a careful inspection of the valley which was to be converted into a huge reservoir by the dam.

The dam itself was, perhaps, an eighth of a mile long at the bottom and, as it touched the receding hill on one side and the spur of Spanish Mesa on the other at the top, it there exceeded that basic extent considerably, perhaps twice. It was a huge mound of earth with a clay core extending from side to side at the narrowest part of the valley, near the south end of Spanish Mesa and a few miles above Baldwin's Knob, the highest but by no means the most picturesque hill or mesa in the valley of the Picket Wire. When completed the dam would be one hundred and twenty-five feet high above the old river bed with a roadway twenty feet broad on the top of it.

The engineers had fortunately found a long flat space of ground, like a meadow, just at the narrows and the huge mound of earth they had built upon it fell away in a long slope toward the lower valley. Below the dam and on the low ground between the mesa and Baldwin's Knob the camp, with its galvanized iron shops, bunk houses, dining halls, kitchens, and officers' quarters, had been erected. The configuration of the ground was such that, although it was unusual to put

them there, convenience had rendered it desirable in this case.

The hills were covered with splendid pines, except where they had been cut to pieces by the diggers and teamsters to furnish the clay for the work. It was intended to complete the dam before the early spring of next year, which was, if any time in the country could be so characterized, the rainy season. Of course, just as soon as the dam had begun to rise, the flow of the Picket Wire below it had been stopped, except when an occasional freshet had been allowed to pass the under-sluice. It was known that the run-off of the river in the rainy season of some years was so small as scarcely to fill the reservoir, and it had been decided to store all the flow of the autumn and winter so that even if the spring rainy season were deficient the beginning of the next summer would find the reservoir full and the new irrigation system could commence operations successfully.

Vandeventer, like the lost Abbott of the International, was also a driver, who spared neither his men nor himself. The work had proceeded with astonishing rapidity, although this was partially accounted for by the fact that the spill-way, which should have occupied their attention, had as yet been only partially excavated. Now, to those ignorant of engineering, an earth dam may seem a temporary expedient, although most of the great irrigation dams of the world are of that character; and everybody knows that if the water should rise high enough to overflow an earth dam it would not last longer than it takes to describe its utter giving way. A flood would sweep it out of the way at once.

The device whereby possible floods are controlled and such dangers averted, consists of a broad channel at one side of the dam, and at such a distance below its crest that if, through any mischance or natural happening, such as the failure of the sluice gates, excessive rains, cloud bursts, or floods, the height of the water is increased until it promises to overflow the dam, this opening will carry off the surplus harmlessly. This channel, usually concreted, is called a spill-way. It is almost always completely open, rarely being provided with gates, and it works automatically. Just as soon as the water rises high enough to be menacing, it flows through the spill-way and is discharged into the valley below the dam until the water level in the reservoir is lowered and the danger of overflowing is ended. The discharged water can do no harm, as there is never more than the river, without the dam, would have sent down anyway. An earth dam without a spill-way would presage almost certain destruction to all who lived in the valley below it.

In the case of the Picket Wire dam, the spill-way had to be cut and, in part, blasted out of the mountain side —that is through the spur of the mesa, which reached down from its high wall towards the narrows. There had been a series of blunders and mishaps, which included the explosion of a shipment of dynamite on the railroad, with very disastrous consequences to accompanying rock-crushers and mixers, and other machinery. The spill-way had not been completed. Its opening should have been about twelve feet below the level of the dam. Vandeventer was not responsible of course. The chief engineer had fumed and protested, but had

been directed by headquarters to go ahead with the other work and tackle the spill-way later. There was, indeed, little reason to hold up the building of that particular dam because of the non-completion of the spill-way.

That was a country, so the most devoted inhabitants freely admitted, in which it was always safe to bet that it would not rain, no matter how threatening might be the appearance of the sky; for in ninety-nine times out of a hundred the negative would win the bet. Said inhabitants did not say the hundredth time might compensate for all the other failures. The weather was like the little girl with the proverbial curl—when it did rain there was no doubt in anybody's mind as to the fact. Sometimes the fountains of the great deep, which in Holy Scripture at least extended overhead, would be broken open and the violence of the fall and the quantity of it, and suddenness of it, would be such that the Westerners would graphically call it a "cloud-burst," which, indeed, it seemed to be.

Outside the rainy season cloudbursts were unheard of, and even in that season, extremely rare. For the valley of the Picket Wire and in the plain beneath, carefully tabulated reports of the rainfall for years had been considered by the engineers. They had chosen the right season for the building of the dam, but when its crest began to rise above the designed level of the spill-way the delay in opening the channel gave cause for some alarm. It is not the probable or certain that is feared. An old version that, of *omne ignotum pro magnifico*—it is only the unknown of which men are afraid, or only the unknown is to be feared! Still there

was nothing Vandeventer could do but obey orders and go ahead. The danger after all was trifling. Another consequence of the waiting was that in his inability to work on the spill-way, he had more hands to devote to the dam and it rose the quicker.

The shape of the country behind it was such that when the Picket Wire flowed with sufficient volume to fill it, a long lake going back through the valley, or cañon, and twisting among the hills for some miles would result. In other words the dam would make a beautiful artificial sheet of water bordered on one side by a high range of hills, on the other by the dam, and on the third by the hills and the low hog-back above Spanish Mesa, which separated the Picket Wire valley from the Kicking Horse gorge up which the railroad ran.

Buried in his own thoughts, communing with himself, considering ceaselessly his position, dreaming of the woman he loved, planning a new career, Meade yet explored every foot of the valley and ravine. He climbed to the top of Spanish Mesa and from its height the whole country clear up the valley to the main range was visible to him. He could look down into the deep ravine of the Kicking Horse, and note the marvelous beauty and airiness of the arch bridge for all it so solidly carried the heavy freight trains of the railway.

He could see far up and around the crooked course of the Picket Wire. The big grass-covered, but otherwise bare and treeless hog-back, that ran from the upper end of the stone island of the mesa was equally visible to him. As it was the low side of the new reservoir he descended to it and studied it carefully.

On another occasion, having said nothing to anyone about his excursion, he took advantage of a half-holiday to go out and inspect the hog-back and ascertain its elevation with relation to the dam. Of course the engineers who planned the great irrigation works had done that, but he wanted to do it for himself. At one place, where the distance between what might be called the edge of the valley and the head of the ravine was narrowest—indeed, he estimated after pacing it that it measured not over twenty feet across—he discovered that the rounded earth crest was slightly lower than the intended level of the top of the dam.

When he returned to the office, he found on examining the construction drawings that an earth dike was planned to run along the hog-back so that the top level should be higher than that of the dam. This dike would be only a hundred and fifty feet long and a few feet high, and could be built in a few days' time. Work on the main dam being more important, nothing had as yet been done on the dike.

Meade had been promoted toward the end of the fall and in a rather unusual way. One of the transit men, a young engineer, got a better job and left his instrument. Vandeventer called Meade before him.

"Roberts," he said, "there's a vacancy for a transit man. You've done such good work so far and shown such familiarity with field work, that I'd give it to you if I had any idea that you know anything about handling instruments."

"I think I may be trusted with one, sir," answered Meade, his eyes brightening.

"Yes, perhaps; but I have watched you in odd hours.

The young men around here are constantly practicing with the transits. I've never seen you put a hand to one. How about it?"

"I'm not exactly a youngster, Mr. Vandeventer," returned Meade, "and I really didn't think it necessary to practice, but if you trust me with one I believe I can manage it."

Old Vandeventer leaned back in his chair in the office and looked carelessly away from Meade to all appearances. He clasped his hands back of his head and seemed lost in thought. Suddenly he began humming a little scrap of verse about another college which Cambridge men sing with zest.

> "*I'm a physical wreck,*
> *From the grand old Tech',*
> *But a hell of an engineer!*"

He stopped abruptly, whirled about in his swing-chair, and shot a quick glance at Meade. It was a trap. And as he sprung it Vandeventer surprised the ghost of a smile, repressed quickly but there, on Meade's lips. The chief engineer was satisfied. Before this, little things had betrayed a fellow alumnus or at least a fellow student of the old Lawrence Scientific School. Vandeventer was pleased at his adroitness. He did not, however, refer to it.

"There's a new transit in that box on the floor there," he said, resuming his indifferent manner. "I've had the case opened, but I haven't taken it out. Get it, and we'll go outside and see what you can do with it."

Now a transit, for all it is used in rough field work, is one of the most expensive and delicate of instruments. It is capable of the most accurate adjustment, and if it is to be of any real use, the refinement of these adjustments must not be impaired in any degree by unskilled and reckless packing. The boxes in which the instruments are shipped are very carefully constructed in accordance with the principles which experience has shown to be necessary, and each one is especially fitted to the particular instrument to be contained therein. The box is a complicated thing and the transit cannot be taken out or replaced except in one way. With a knowledge of the combination, so to speak, it is comparatively simple to take a transit from the box; without that knowledge, which none but an expert transitman, or the packer himself, can have, it is rather difficult without running a risk of ruining the instrument.

This command was another of Vandeventer's tests therefore. Meade knew this as well as his superior. In spite of himself he would have to betray his familiarity. Well, he had brought himself to the conclusion that he could not continue his work without very soon disclosing the fact that he had been an engineer. And in case of the inevitable the sooner the better. So long as he had to betray himself, he would have all the advantages as well as the disadvantages. He unlocked the door of the box, slid the instrument out quickly, accurately, without a moment's hesitation, and rapidly unscrewed the head from the slide-board, and screwed it carefully on the tripod. Vandeventer's eyes sparkled.

"Come outside," he said, leading the way to the side

of the hill, "and set it up there over the tack in that stake and level it."

Beginners have been known to take ten minutes to get a transit set up, leveled, and centered. It is good work if it is done inside of a minute, thirty seconds is very fast. In forty-five seconds Meade reported, "all ready, sir." He could have done it in less, but he was a little out of practice he said to himself.

"Look here," said Vandeventer, "you can't pull any more bluff on me, Roberts; you're an engineer all right."

"I know something about the practical side of it, sir," answered Meade, turning a little pale and wondering how far Vandeventer would press his questions and what he would learn.

But the engineer was a man.

"Practical, yes and theoretical too, I'll be bound, but I don't seek to pry into your antecedents. It's enough for me if you do good work for me here."

"I'll do my best, sir."

"Good, the instrument is yours."

That was the first step and the next step came very shortly after when, having further demonstrated his capacity in other ways, Meade was given charge of the work on the east end of the dam.

"I don't care who he is," said Vandeventer to his chief subordinate, "he knows what he's about and if you watch him you'll see. He's keen on handling men. The other section foremen will be hard put to keep up with him. He keeps watch on himself. He's got some secret he won't betray. He doesn't mingle with the crowd, but every once in a while something slips out.

What he doesn't know about engineering nobody needs to know, I'll wager."

"How do you account for his being out here?"

"Oh, it's the old story, I suppose; he's come a cropper somewhere—down and out and wants to begin again, and can't do anything but this. It's not our business, Stafford; he does good work for us and we're satisfied."

XXIII.

THE FORMER AND THE LATTER RAIN

THE work on the dam was progressing splendidly. Vandeventer, driving his men hard, shared in all their furious efforts. He was not only their leader, but their inspiration. He could safely work them to the limit because by a process of elimination during the work he had surrounded himself with a body of able assistants, and by the same method his teamsters and workmen, many of whom were foreigners, had been culled from a greater number, until they had become a small army of picked men, of which to be proud.

Among all these Meade stood very high. He still occupied his comparatively humble position as gang-foreman, but he had shown such capacity in the four months he had been with Vandeventer, such a grasp of things, such an ability to handle men, in one or two instances when, with intention to try him, the resident engineer had given him charge of some special work, that Vandeventer unconsciously looked to him in any emergency. He actually found himself consulting Meade on occasion!

He had accompanied the younger man on one of those rambles which he had hitherto taken alone. He had not broken down Meade's reserve, but he had won his admiration and regard. Vandeventer was not unknown in engineering circles. In earth work he was by way of being an authority. His experience had been

varied and extensive. Meade's reserve and reticence rather hurt the older engineer. He had invited confidence and had even given his affection. He intimated delicately that if the other were under a cloud Vandeventer might be in a position to help him.

It was fortunate for Meade's purpose of concealment, for his incognito, that most of his engineering work had been done abroad and that he had been out of touch with American engineering for practically the whole of his career. Vandeventer was a Harvard man too, and that made it especially hard for Meade to keep from betraying himself. As a matter of fact the younger man actually longed to make a clean breast of it, but he could not quite bring himself to do it, yet. That might come later.

Three months ought to see the completion of the dam and the long canal, which was to carry the stored water to the irrigation ditches below. Vandeventer was already making plans for another big job, and he had decided, in his own mind, that among the subordinates whom he would take with him, the newcomer should have the first chance. Vandeventer felt proud and satisfied when he surveyed the work that had been accomplished in the six months of labor. To be sure the delay in the completion of the spill-way disquieted him a little.

The dam had reached the spill-way level a fortnight before, and had now passed it. Indeed, on the fifth of January, the dam builders were within five feet of the top; that is, the crest of the dam was one hundred and twenty feet above the level of the valley. They had planned to run the spill-way around the eastern end of

the dam. That was the end near the spur of the mesa. It was fairly soft rock on that side, except near where the end of the dam joined the hillside it was covered over with earth. Through this rock the channel would be opened to such a depth that when the water rose too high in the reservoir it would flow through this channel around the dam, and discharge into the valley a safe distance below the foot of the dam. This was the spill-way, which had not yet been completely excavated or blasted out on account of the delay in receiving the rock drills and dynamite which had been ordered, as has been explained.

These supplies had finally arrived in December, and by putting as many as possible to work on the spill-way Vandeventer had succeeded in opening it for its entire width to an average depth of about seven feet below the intended top of the dam; that is, it was now about two feet deeper than the actual crest of the dam, but it still lacked five feet of its designed depth.

The rainy season, an inspection of the records had shown, was not due for a month and a half yet. That would give him ample time to complete the dam and the spill-way. Sometimes it did not rain from June until the next March. In that country that was why irrigation was needed. This year, however, there had been some very unusual rains during the fall and the water back of the dam was now ninety-eight feet deep, which made it twenty-two feet below the level to which the dam had risen and twenty feet below the spill-way. This was much more water than anyone had dreamed would be in the reservoir at that time, and was perhaps more than should have been allowed. Still there was a

safety margin of twenty-two feet, which Vandeventer was sure would be ample. The financial promoters of the project were very anxious to have the reservoir full when the irrigating season opened, and the engineer's judgment had been influenced by their eagerness to get it working.

The broad sheet of water ran back into the valley for many miles. In fact the dam had transformed the country into a beautiful lake. Sometimes it rained in the mountains when it did not rain down in the valley, and there was a constant, if very small, rise in the level. Vandeventer personally carefully gauged the water every day. Naturally he had noted that it rose gradually, but as the dam rose proportionately more rapidly, he was not uneasy. Yet, as a good engineer, he was watchful and largely because of the unfinished spillway he urged the men to the very limit.

Those who could understand the situation seconded him heartily and such was the contagion and the enthusiasm of all hands as the job approached completion that, although the men grumbled at being so driven, they worked with a will. The weatherwise from the town, who sometimes rode up to inspect the work, assured Vandeventer that it could not possibly rain before March, and the mere fact that so much water had fallen, rendered it more improbable that any more would come down. Yet nature has a way of doing unexpected things and everybody knows that all calculations which depend upon nature are empiric anyway. To lay down an invariable natural law for the weather is impossible because of the infinite variety of permutations and combinations of which nature is capable, espe-

cially when it comes to weather manifestations in what are known as the "arid regions."

Whatever be the case, at three on the afternoon of January sixth it suddenly began to rain hard without warning and with no premonition on the part of anybody. It was not one of those terrible downpours referred to, which are popularly and graphically, if incorrectly, known as cloudbursts, but it was an excessively hard, steady rain. The heavens over the range were black with clouds and so far as anyone at the dam could see, it was raining from the crest of the mountains down. There were some anxious discussions in the dining-room of the resident engineer and his American assistants.

At four o'clock it was decided to open the undersluice gate about halfway, but when this was done the volume of water it was capable of discharging was too small to help very much, and on opening it to its fullest extent the velocity of the water rushing through was so great that the river bed was rapidly scoured out. For fear of undermining the toe of the dam it was necessary partially to close the sluice once more.

The water was rising, first at the rate of three or four inches in an hour, then half a foot, and finally nearly a foot. By six o'clock that night it had risen two feet. It was still raining hard at that hour, although not quite so furiously as it had been. There were no signs of a break when night drew on, but it was practically inconceivable that it could rain all night, and rough calculations convinced them that even if it did rain until morning at the present rate there would still be a margin of safety of perhaps fourteen or fifteen

feet at dawn, that is to say the top of the dam would still be fourteen or fifteen feet above the water level.

Of course if the spill-way had been completed it would not have been of so much importance if it had risen further, because before it grew dangerous it would have been relieved by the outflow through that channel. Well, although the situation required watchfulness and was somewhat alarming it was not desperate. The men were advised to put in all the time in their bunks so as to be good and ready for the hard battle which might come in the morning, and as they were all tired out with their day's work the little group soon broke up and each man went to his quarters.

Vandeventer, however, could not sleep. The rain kept up steadily all night. It thundered on the galvanized roofs of the houses with a roar of sound which he would not have minded if he had been used to it and gradually seemed to increase in intensity. The resident engineer finally got up and dressed himself, and protected by high rubber boots and a cowboy slicker and a sou'wester, he left his quarters and went out to inspect the dam. He carried a lantern of course, for it was pitch dark and, if possible, the rain dropping from the black sky made it more difficult to see.

He was surprised when he got to the dam to see on the other side another lantern. Someone else was abroad. For what purpose? There was no reason for Vandeventer to suspect anyone of evil intent. But by this time the situation had rather got on his nerves, what with the rain, his sleepless night, the unopened spill-way, and the possibilities of the situation. Closing the slide of his own lantern to prevent observation

and being on familiar ground he went straight toward the other side. The noise of the rain subdued any sound that he made and he was able to come quite close to the other light without being noticed.

The lantern was standing on the roadway on top of the dam. A man was kneeling beyond it, his figure seen dimly in the faint light of the lantern. He was staring intently down the front of the dam at the water. The lantern was near the edge and it faintly illuminated the black rain-lashed surface below. Vandeventer realized with a shock of horror how much more rapid the rise had been. A quick estimate convinced him that the level of the water was now within eight or nine feet of the dam—and it was still raining!

The face of the kneeling man was hidden by a sou'-wester and he had on a heavy black rubber raincoat. Vandeventer reached over and touched him on the shoulder.

"What are you doing here?" he asked.

The kneeling man sprang up with an exclamation. It was Meade. The relief in Vandeventer's mind was great at the recognition.

"I just came out to look at the water. I couldn't sleep with all that pounding on the iron roof of the quarters, so I dressed and came out."

Vandeventer opened the slide of his own lantern and threw the light on the reservoir.

"It's risen eight or ten feet since we saw it."

"At least that," said Meade.

"I judge it's about nine feet down to the water."

"Not an inch more than that."

"And with this rain——"

"It's not coming down so hard as it was when I first came out here," said Meade. "I think you can see it slackening yourself."

"Yes," said the resident engineer, listening a moment, "I believe it is. If it stops now," he continued thoughtfully, "we ought to be safe."

"Yes, I think so," answered Meade.

In the night alone, together in that crisis in their fortunes, the two men were interchanging thoughts and ideas on terms of perfect equality. It did not occur to Vandeventer to question why, and that they were doing so aroused no surprise in the mind of Meade.

"Of course," continued Meade, "even if it does stop raining we'll continue to get a lot of runoff from the watershed for some time."

"Yes," said the resident engineer, "that of course, but if the rain stops everywhere we can scarcely have a rise of more than five or six feet and that would still be a little below the spill-way."

"It's stopping here now," pointed out Meade and, indeed, the force of the downpour was greatly diminished.

The two stood watching the dam and the black lake beyond it in silence for a few moments until the rain practically ceased. The air was misty and heavy with moisture, but the rain was certainly over for the time at any rate.

"Thank God," said the resident engineer in great relief. "Now if it has stopped everywhere we'll be all right."

"Yes," said Meade, "and I'm inclined to think it has stopped everywhere. Whoever thought it would

rain in January here? There hasn't a drop, to speak of, fallen in January for twenty years, or since there have been any records. Why in heaven's name it had to come now I don't see."

"Does the water seem to you to be rising?"

"Yes," answered Meade, after a careful survey, "but much more slowly."

"Look here, Roberts," said Vandeventer suddenly, "you know you're a first-class engineer."

Meade shook his head.

"You can't fool me," said the older man. "I've watched you. You know more about the game than anybody here except myself. You don't choose to confide in me, although I like you, and I am in a position to help you."

"I appreciate what you say, Mr. Vandeventer," returned the other, "there is no one to whom I should rather tell the whole story than to you, but I can't, not yet."

"Well, keep your own counsel, but if you ever want a friend count on me; meanwhile as a man of experience and ability what would you do?"

"Get out the men and build up a temporary dam on the top of the roadway here, to turn the flow over to the east bank and make the spill-way do more work."

"But the rain has stopped."

"And in all probability it will stay stopped, still you never can tell. That it rained at all is contrary to the universal expectation and observation, but once it has done so it may do so again, however unlikely. A few more hours of rain like that we've had and the whole thing would go. If the water were as high as the top

there'd only be two feet of head in the uncompleted spill-way and that wouldn't be enough to discharge it at the rate it's been coming in."

"Of course," said Vandeventer thoughtfully. "And if the dam goes," he added, "there are ten miles of back water up there and millions of cubic yards impounded, which would sweep down the valley. There wouldn't be a thing left of the camp, the town, the new railroad bridge, or anything else."

"Coming on top of the International, the loss of this big and expensive viaduct would about finish the Martlet Company," said Meade thoughtlessly.

Vandeventer looked at him sharply. An idea suddenly came to him. Meade had turned away his head as he realized his slip, so he did not observe the light in Vandeventer's eyes. However, the resident engineer was a good sort.

"You are right," he said quickly. "I hate to call out the men, but we've got a little chance now the rain has stopped, and we can work to advantage in spite of all this awful mud"—he lifted his foot up and disclosed it caked and clogged with masses. "I'll take charge in the center here and Stafford on the left, and I'm going to give you charge of the east end of the dam over by the spill-way. If only those drills had been here six weeks ago."

"We might set the men to work on that rock now," said Meade.

"It would be useless. There's too much of it. No, if we're going to save the dam we've got to build it up and try to keep ahead of the waters if they rise any more. The higher we can build it, the greater will be

the head on the spill-way, and the more will be discharged. I'll turn the men out at once."

"But what are you going to do?"

"I'm going to palisade the top of the dam. There's plenty of timber already cut down and we will cut a lot of young pines and build a palisaded wall of timber across the top three or four feet back from the edge. Well banked on the down-stream side it may hold."

"It might be worth while to line that palisade with galvanized iron sheets from the houses," said Meade.

"A good idea," said Vandeventer, "and we'll pile what underbrush and small stuff we have in front of the palisade and heap what rocks we can find on top of that, and we'll bank it up on the other side with earth. It's a poor dependence, but it will hold for a while anyway and every moment of time may be precious."

"How about sand bags, sir?"

"We've got a few hundred cement bags, but not enough. I wish we had a few thousand; however, we will fill what we have and if the water rises and begins to trickle over the top and through the palisade we'll jam those down at the danger points. Can you suggest anything more?"

"Nothing."

"Good. We'll turn out the men. They've had six hours' sleep anyway."

XXIV

THE BATTLE

IT was now three o'clock in the morning. In about half an hour the men, naturally grumbling and protesting at being deprived of any of their sleep, were out and at work. Lanterns were lighted everywhere. The rain had fortunately not resumed, and the air was soon filled with noise and confusion. Men with axes were busy on the hillside cutting the young pines. Horses, which would have protested as much as the men had they been able, were hitched to the dump wagons, the steam shovel began tearing away the hillside. Some of the men were detailed to knock down some of the galvanized iron houses and the battering of the hammers on the metal added to the din.

Under Vandeventer's personal direction a row of stakes was driven into the top of the dam about three feet from the front of it. He had intended to put the stakes a foot apart, but he decided that in the emergency he would not have time for so close a palisade, and therefore they were placed about two feet from one another. There were only about one hundred and fifty men working on the dam, and there was a limit even to what the hardiest and most desperate worker could do.

Big sheets of overlapping galvanized iron were nailed roughly to the fronts of the firmly bedded stakes and the small branches and brushwood were thrown

down before it. There were a great many small bowlders and big stones which had accumulated during the excavations and these were carried out on the dam in the wagons and thrown down on the brushwood so as to bind the improvised mat of branches into a sort of revetment; spare timbers, broken wagon beds, old wheels, joists of dismembered houses were driven into the earth to serve as braces behind the palisade; but the main support of this wooden wall, with its skirmish line of frail brushwood, was a bank of earth which was piled up behind it, on which every man, even the chiefs themselves, who could be spared from other tasks labored with breathless energy. The water was still rising, although the rain had stopped; the natural drainage would cause that, but the rise was slower.

At dawn Vandeventer personally carefully measured the depth of the water and gauged it again. It was a scant six and a half feet below the top of the dam. At daylight the palisade at which they had worked so hard in the darkness showed its flimsy front to all. It was a desperate expedient. That, the least intelligent workman could see. If the water rose above the top of the dam it was gravely questionable whether the palisade would hold it at all, yet there was no other way of increasing the depth of the spillway enough to discharge the flood volume.

Working as hard as they could, they had barely succeeded in raising the earth bank back of it a foot high. They kept at it unremittingly, although it did not seem to be of much use. Vandeventer, Stafford and Meade gathered together and scanned the sky, seeking to discern the signs of the time, the purpose of the

heavens. It was clearer in the east. The clouds to the northwestward were in violent action apparently. Lightning flashed through them and over the great range itself; low muttered peals of thunder came down from the peaks lost to sight in the blackness overhead. They observed all this carefully and Vandeventer turned away, shaking his head.

"I don't know," he began—the three of them were over on the east side the better to see up the valley—"it looks pretty bad, doesn't it?"

"It does," answered Meade, while Stafford nodded his head.

"And, by the way, Stafford, have you notified the town and the bridge people of the danger and bid them prepare for it?"

"I tried to telephone them awhile ago, but the connection has been broken; the storm has played havoc with the line probably," answered the assistant engineer.

"Well, what did you do, then?" asked Vandeventer a little imperatively.

"I sent a man down on horseback in a hurry to warn them that if it rains again the dam might go, and if it did it would go with a rush; that the water was now only six feet below the level and that they had better get up on the hills. Of course, last night's rain must have made the road almost impassable, but he ought to get there by nine o'clock. I told him to tell the Martlet people to take whatever steps they could devise to hold their viaduct and their machinery," answered Stafford, as he turned and walked toward his own part of the dam.

"Good," exclaimed Vandeventer. "There's nothing left for us to do but keep on."

The resident engineer looked white and haggard. Although it was cold and raw in the wet air he wiped the sweat from his forehead.

"The men are doing splendidly, sir," said Meade.

"Yes," said Vandeventer, "many of them have their wives and children back in the town. Some of the Italians have bought land on the prairie and are going to settle here. They're fighting for everything they've got on earth. What do you think of the chances of this palisade of ours?"

Meade shook his head.

"You want a frank opinion?"

"Of course. What else?"

"It wouldn't hold an hour."

"That's right, and yet it's all we can do."

"That hour might save the dam, though."

"Doubtful," said Vandeventer gloomily.

"It's all we can do, as you say, sir, but if the water rises more than seven or eight feet——"

"Say it," said Vandeventer.

"The dam would go like a house of cards."

"Exactly. And look at that cloudbank over there in the northwest. It's spreading."

"What wind there is," said Meade, moistening his finger and holding it up to feel the direction, "is blowing the opposite way down here, but you can't tell what is happening up there. Well, all we can do is to fight on."

And fight they did. It was almost at first sight like the hand of man against the hand of God. There was

no more room for science, no more room for engineering expedient. It was chop and hew, break and pound, dig and drive, carry and pile. Throwing off his coat, Vandeventer seized a spade and began to work like any other laborer, and the rest of the higher men followed his example.

At six o'clock the blackness hanging in the northwest began to turn their way. It was coming down the mountain. It was headed for the valley. Vandeventer saw it, every teamster, every common laborer saw it. It was coming. Unless heaven itself interfered there would be more rain. They had worked desperately before, but now they applied themselves to their tasks with a kind of wild fury. A sort of insanity took possession of them. They would not be beaten. They cried, at first shrilly and then hoarsely and raucously, encouraging words and phrases from one to another; terse, vivid, profane, desperate. They stood there and they heaved and dug and piled and hammered and hurled and drove fiercely. It was a battle madness that came into them. They saw red like the berserker of old. Yes, it was not unlike a battle in other ways, for with the rush of the northwest storm came roaring mighty thunder and vivid and terrifying lightning. It was as if great darts of light literally were hurled by some gigantic hand behind the black screen of sweeping cloud down upon the granite mountains. They saw splinters of fire where the thunderbolts struck. The pealing of thunder was appalling.

Their frail palisade backing was not half completed. It must be raining somewhere, for the water was still

slowly rising. It was five and a half feet now from the crest. It was hopeless if another rain fell, and the rain was coming. There was an added chill in the still air of the valley as the storm drove down upon them. A few of the fainter hearts flung down pick and shovel and axe and stood craven. Oaths, curses, blows even, from those of the braver sort shamed them into work again. These brave hearts and true might be swept away with the dam if it gave way, but they would not give up, and no man working with them should flee his task or shirk his duty. By the Living God, whose sport and playthings they seemed to be, they swore it; and so weak and strong, bold and timid labored on—desperate, resolved, god-like in their courage and persistence.

The clouds were moving swiftly now. To the east it had been clear, but now it was also black, and then with a roar greater even than a thousand thunderclaps the wind tore down the mountains, through the narrow cañons, into the valleys, shrieking in the pines, and fell upon them and hurled them down and brushed them back. And after the wind, the rain. A drop or two struck Vandeventer's cheek; another, another, and then the flood. He lifted his head and stared and shook his fist at the sky and turned to the human termites he commanded.

"Carry on, carry on, boys," he cried, shrieking to be heard above the thunder peals, "we'll beat it yet."

A cheer rose about him and was caught up and ran along the top of the great dam. The half-maniacal yell was such a cry as men might give vent to in the heat of battle, the excitement of wild charge, and then

they fell to it again. The more ignorant, unaware of the feebleness of the palisade, the more knowing indifferent to it, seeing only the job, alike realized only their duty to fight on, to answer the appeal to their manhood, to refuse to admit defeat even when life trembled in the balance.

Yes, to use the ancient simile again, the fountains of the great deep were broken open. What had befallen them before was nothing to this. The hard rain of the night seemed trifling compared to this avalanche of water. This was a cloudburst indeed. And to make it worse, to make their task harder, to render their efforts useless, the high wind roaring down the valley piled the water up and drove it in thunderous assaulting waves against the great mound of earth on which the men struggled and labored frantically. Vandeventer, shovel in hand—he did not dare to throw it down, lest his action be misconstrued,—went from gang to gang, from man to man, talking to them, appealing to them, pointing out weaknesses here and there, inspiring them, holding them up as a man might hold a stricken line against the onslaught of a victorious and overwhelming force. And against wind and rain in that thick darkness, blinded by the flashing lightning, stunned by the pealing thunder, with zeal superhuman they toiled on and on and on.

Back and forth went the chief, showing himself a leader of leaders, and wherever he stopped the fury and desperation of the effort to stem the tide increased. When he came plodding along the muddy roadway to the part committed to Meade he did not find the engineer.

"Where's Roberts?" he yelled above the noise of the storm.

"He and two men have gone, sir."

"Gone?" cried Vandeventer, cut to the heart at what he thought was a desertion. "Well," he shouted, realizing there was nothing he could do then and that he had neither breath nor time to waste, "there's more need for the rest of us to take their places."

He drew a man or two from the other gangs to re-enforce this danger point and himself directed their work.

Now it takes time for water to rise five feet, even in a cloudburst or a succession of them. The rain constantly seemed to increase as the wind drove it on. Vandeventer knew that the dam was doomed, that the sluice and the half-finished spill-way combined could discharge only a small part of the flow, but he knew that he would have two hours at least to work before the water could pass the crest, undermine, and batter down the palisade and begin to trickle over. Just as soon as it did roll over the top, unless they could stop it, the whole thing was gone. For those two hours the supermen labored unremittingly in the downpour with a persistent and heroic courage that should have been recorded in song and story, but which was not. It was remembered after a while by none, save a few. To the many it was only "all in the day's work"!

The under sluice in the side of the dam which would later serve as head gate for the canal had been intended to pass the smaller floods which might occur during the construction and had been open since the rain began. It carried off a great volume of water, but hopelessly little in comparison with the flood. Foot by foot in the

torrential downpour the water rose. At half after eight it reached the level of the spill-way and commenced to rush through in ever increasing volume, but the flow into the reservoir was far greater than the spill-way's capacity.

Still the sight of the rushing water encouraged the men. Every one of them felt that if the palisade held the discharge would be increased enough to stop the rise, but at present the effect was small. By nine o'clock it was within a foot of the top. They began to measure its rise by inches. Although the dam had been carefully kept level as it was built, the trample of horses and men, the present digging and palisading and revetting had caused little depressions. Now the water rose to the level. Here and there it began to trickle over!

The rain coming down from the mountain tops was as cold as ice, yet the men were in a fever of excitement. They had got their second wind. They were too enthused, too desperate, to feel their weariness. They had not worked before as they did then. It was the last possible nervous outburst with most of them. They could keep it up a little longer—till they dropped dead. As the mad thoroughbred falls in his stride in the track, pushed beyond his power of endurance, as even the common cart horse can be made to go until he drops, so these men, white, haggard, nervous, drawn-faced, sweat mingling with the rain on their sodden bodies, would go till they broke. They had not quite reached that point yet.

There were some five hundred heavy cement bags which had been filled with sand and piled up on the roadway at convenient points. As a forlorn hope, as

a last try, Vandeventer called all the diggers and ditchers, and hewers and drivers, and bade them tackle the sand bags. The timber wall that rose to four or five feet was now packed to a height of three with an unequal wall of earth.

The waves were beginning to roll against the rampart, although their force as yet was broken by the brushwood. Vandeventer jumped up on the palisade near the center. There were some large logs there where he could stand and whence he could get as clear a view of the whole top of the dam as was possible through the driving rain.

"There," shouted the engineer, pointing to a red trickle—it seemed to him like blood, taking its hideous hue from the red clay of the banks—where the water had found a low spot and was washing across the top and trickling through the new wall and down on the other side. Even as he pointed the trickle became a stream and the stream bade fair to be a flood. Men ran and dropped sand bags over in front of the palisade right where the leak had occurred. Other men heaped up the earth behind the wall, seeking to smother it and stop it. The water checked there, they were forced to do the same thing at another place. Desperately they dropped their sand bags, sturdily they plied their shovels in the mud, scrambling and yelling they ran from leak to leak. They lifted the heavy bags of sand as if they had been loaves of bread and jammed them down. They swung pick and shovel like toys, although the rain made all the earth sticky mud and the work all the harder. The water was clear over the top of the dam now and streaming through the revetment of

brush and surging against the palisade. Where it did not let the water through, the line of stakes was beginning to bend backward.

The men who had expended their sand bags and could get no more in one final effort ran to the palisade, dug their heels madly in the wet, slimy earth and put their shoulders against the bending stakes as if to hold them up by main strength. Thin streams were flowing here and there, now unheeded. Checked and held in one spot, the water broke through at another. The spill-way could not control the rise.

"She's gone, she's gone. My God!" gasped Vandeventer under his breath. He had fought a good fight. He could do no more. There were no more bags of sand. Save for the men straining at the wall here and there and everywhere, there was left nothing but to stand and wait, having done all. As one man saw another the whole hundred and fifty caught the contagion and threw themselves against the palisade, wet and chilled from the rain, but yet madly, recklessly, Americans and foreigners alike. They would hold it by main strength for another minute, they swore, oblivious to the fact that just as soon as it went it would go with a rush.

The stockade would be swept away first and they would go with it. What of that? The men back of it matched their brawny arms against rain and wind, the powers of man against the powers of God, but not mockingly. It is perhaps doubtful if they realized what they did. It was instinct, habit, blind desperation now. If the flimsy wall failed under the terrific water pressure they would be hurled beneath it, swept down

the slope of the dam, buried in the débris as it was swept away, caught up if they by any chance survived so far, and hurled broken and battered down the valley in the terrible flood that would ensue. What did they know about that, or knowing, what did they care, as they strained at the wavering timber wall? And still they held as the rain poured down on them, soaking through their soggy clothes, the colder on their exhausted bodies for the keen wind that blew across them.

Well, they had done everything they could. Vandeventer jumped down and pressed himself against the nearest timber with the men and waited, silent. He had never sustained such a pressure in all his life. Like Atlas, he felt as if he were holding up a world. And the mocking thing about it all was his feeling, nay his realization, that he was not really holding anything, that if the palisades failed, his pressure, his resistance and that of all the other men amounted to nothing. Yet he held on and they, too—demi-gods!

IV

SPILL-WAY

RESERVOIR
Hog Back
Kicking Horse
Arch Bridge
Hut
Siding
Spanish Mesa
Canal Head Gate used as Under Sluice
S.W.G.P.R.R. To Coronado 20 mi.
DAM
Unfinished Spillway Construction Camp
Canal
Picket Wire
1 MILE

XXV

THE ANCIENT ART OF FASCINATION

AND much of the last wild hurricane of work took place under the observation of a woman!

From the top of the big mesa there was a clear view of the new reservoir, from the dam on one side far back into the hills on the other. In spite of the tremendous downpour and the fierce gale Helen Illingworth stood exposed to both attacks, and, indeed, indifferent to them,—albeit protected by slicker and boots and sou'wester—fascinated by the titanic struggle between nature and man of which she was a witness. How she came to be there herself is another chapter and how the two men who stood by her came to be with her is now to be related.

The general investigation by Rodney and Miss Illingworth had produced no results. A careful study by each of the members of the new alliance of Rodney's accurately reported, graphically set forth notes upon the subject had only served the more thoroughly to convince each of them of the correctness of their conclusions. Analyzed and expanded, iterated and reiterated, scrutinized and emphasized by each of them separately and then together in many long discussions, they only made them more and more confident that Meade was blameless. But the most assiduous effort with the heartiest will in the world and the promptings of devotion and affection could not make a case out of

these suggestions and their inferences that would hold water. They could not establish their contention beyond peradventure in the face of Meade's direct admission and Shurtliff's corroboration. They could not establish it in the public mind by any evidence at all if Meade and Shurtliff remained silent.

If either one or the other of the two conspirators could be brought to tell the truth, Meade could be restored, at least sufficiently so for the purpose of argument; the argument that Helen Illingworth sooner or later must make to her father. It was that to which she gave the most thought, it was for that she planned and longed.

Two people cannot resolve even by mutual consent to dismiss from their daily thought and conversation any subject whatsoever without introducing in place of it a certain constraint. It is as futile to attempt to dismiss anything absolutely from the human mind as is the oft suggested cure for rheumatism—doing certain things without thinking of the disease sought to be cured!

Colonel Illingworth had dismissed Meade from his mind because he hated him. Helen Illingworth refrained from talking about him to her father because she loved him. So they were never in each other's presence without thinking of the man. This was a source of great irritation to the father. On occasion he almost found himself at the point of shouting at his daughter to talk about him. And that she so carefully avoided the subject and as the avoidance was so obviously in accordance with his own wish, the restraint irritated him the more. The fact that they both

sought so carefully to maintain the old relationship made it the more impossible. For relationships which are primarily founded on love cannot be maintained by constraint without the weakening of the great force upon which their tenure had previously depended. There is nothing like concealment to impair and weaken a tie unless it be a ban! Prohibitions rarely prohibit.

Still there remained a deep and abiding affection between father and daughter and they managed somehow to get along outwardly much as before. Indeed Colonel Illingworth was more kind and considerate than ever to his daughter, and she repaid him with more than usual care and devotion. The very fact that she seemed to have accepted the situation and obeyed the law he had laid down gave him some compunctions of conscience. On that account perhaps he had been the more willing to accede to her request to take Shurtliff into his employ. In no way was Shurtliff responsible for the failure of the bridge or for any mistake in the calculations of the Meades, and Shurtliff was an invaluable man, not only for an engineer but for the president of the Martlet Bridge Company.

He was familiar with the subjects that Colonel Illingworth discussed and wrote about. He was intelligent and reliable to the last degree, his reputation for steadiness and discretion unquestioned, and he was marvelously efficient in his subordinate position. The Colonel, having first tried him out, had advanced him rapidly after learning his worth. He was now his private secretary. Shurtliff being an old bachelor without kith or kin and not originally fond of women, found himself suddenly in touch with one of the sweet-

est and kindest, as well as the youngest and most beautiful of a sex about which he knew nothing.

His new position naturally brought him into close touch with the Colonel. The old man transacted a good deal of his business in his own house. Shurtliff was frequently there. Under other circumstances Helen Illingworth would have treated him with that fine and gracious courtesy which she extended to everyone with whom she came in contact, but she would not have especially interested herself in him. She would not have made him the object of the delicate attention and given him the careful consideration which would have completely turned the head of a younger and more susceptible man.

There had been a prejudice in Shurtliff's mind against women in general, and Helen Illingworth in particular. He had quickly realized that she above all persons had the greatest interest in disproving Meade's statement and his own and in laying the blame for the failure of the bridge where it belonged, on the shoulders of the patron, to love whom had been the habit of his life. Therefore, the old secretary was constantly on his guard lest he be entrapped into admissions or actions which might be used to discredit the older Meade and convict the two conspirators.

But Helen Illingworth was far too clever to allow any inkling of such a design to appear. Not the remotest hint of such a purpose did she betray. She deliberately set about to win the old man's regard and respect and perhaps eventually his affection. She had the ordering of her father's household, of course. That was a matter in which the Colonel concerned himself

not at all so long as things went smoothly, as they always did. He was a little astonished at her treatment of Shurtliff, but the old secretary was at heart a gentleman and there was no reason why, if Helen chose to include him among her friends and invite him to dinner and otherwise make him welcome in the house, she should not do so. And in his dry, precise way Shurtliff was rather likable. He was touched and flattered by her kindness and in spite of his suspicions, which gradually grew less, by the way, he exerted himself to show his appreciation and to bear himself seemingly in his new life.

Colonel Illingworth had no suspicions whatsoever that there had been any conspiracy to suppress the truth and shift the blame. True his daughter had protested on that fatal day that she did not believe Meade and Shurtliff, but that was in the excitement of the moment and understandable in view of her plighted troth. Helen had never discussed that with him; even the very name of the engineer being banned, she was silent. She was wise enough not to try to worry or bother her father with arguments on that point, to which, of course, he would not have listened in any event.

Accordingly the conferences with Rodney had never been brought to his notice. There was no use stirring up trouble and strife. There was no necessity even to discuss it with her father until she had found more proof. So he at least had no suspicions as to her treatment of Shurtliff. He could not see any end to be gained and therefore he jumped to the conclusion that there was none.

In course of time, as Miss Illingworth never referred to Meade in the secretary's presence, all his mistrust disappeared. Finally he even brought up the subject of Meade's whereabouts of his own motion. Although the girl was fairly wild to talk and ask questions she had wit and resolution enough to change the subject when it had been first broached and for many times thereafter.

Helen Illingworth was fighting for the reputation of the man she loved and for her own happiness, and she was resolved to neglect no point in the game. She partook in a large measure of her father's capacity, but she added to his somewhat blunt and military way of doing things the infinite tact of woman, stimulated by a growing, overwhelming devotion to her absent lover. She cherished that feeling for him in any event and would have done so but the whole situation was so charged with mystery and surcharged with romance that it made the most powerful and stimulating appeal to her.

She lived to vindicate Meade and she bent every effort toward that end. She did not overdo it, either. Finally, as he himself continued to press the subject upon her, she made no secret to Shurtliff of her devotion to the younger Meade, her sorrow that he had made such a declaration, and her determination to wait for him. She was always careful to end every conversation by saying that she knew her outlook was perfectly hopeless and that she could expect nothing except sorrow until the younger Meade was rehabilitated. She so contrived matters, while constantly affirming her feeling for Meade, as to let Shurtliff infer that she

was convinced that he had been telling the truth in what he had said.

After a time she deftly appealed to him to know if he could not help her discover the truth which she tactfully maintained even in face of the evidence that Shurtliff had given. And she did this in such an adroit way that Shurtliff became convinced that she did not connect him with any willful deception, and that she believed that he was deluded himself and occupied the position of an innocent abettor. And Shurtliff, in his strange, old, self-contained way, finally grew to like Helen Illingworth exceedingly. Indeed he started in his work with natural antagonism to Colonel Illingworth, and when he sensed, as he very soon did, the difference that had arisen between father and daughter, he espoused the cause of the latter. He was the kind of a man who had to devote himself to somebody. He began to wonder if there was any way to secure the girl's happiness without betraying the elder Meade.

She compassed the secretary, who was, of course, old enough to be her father, with sweet observances and he found it increasingly hard to keep true to his falsehood. Now she was capable of fascinating bigger personalities than Shurtliff, although she cared little for that power and rarely exercised it. The old man actually got to thinking of her as a daughter. Sometimes when they had an hour together he found himself seconding her arguments for the innocence of the younger Meade, for she had progressed that far by now, with little details which his knowledge and experience of the two men could supply. Trifling in themselves as were these contributions, as Rodney pointed

out when she repeated them to him, they nevertheless added something to the cumulative force of the argument so laboriously built up by the friend and woman. And they were decidedly indicative of a growing mental condition on the part of Shurtliff from which much might be hoped and expected.

But Shurtliff could not bring himself to come out boldly and confess, and his failure to do that made him more and more miserable. At first his conscience had been entirely clear. He had viewed his conduct in the light of a noble sacrifice for the great man. Now he began to question: Was it right to blast the future of the living for the sake of the fame of the dead? Probably he would have questioned that eventually without regard to Helen Illingworth, but when he began to grow fond of the woman and when he realized, as she unmistakably disclosed it to him, that her own happiness was engaged and that he was not only ruining the career of a man but wrecking the life and crushing the heart of an entirely innocent woman, he had a constant battle royal with himself to pursue his course and to keep silent.

Yet such is the character of a temperament like that of Shurtliff, narrowed and contracted by a single passion in a life and lacking the breadth which comes from intercourse with men and women, that his compunctions of conscience only made him the more resolved. The lonely, heartbroken old man swore that he would never tell. The young man could go his own gait and work out his own salvation, or be damned, if he must. The woman's heart might break, pitiful as that would be, but he would never tell. He was as

unhappy in that determination as any other man fighting against his conscience must inevitably be.

Sometimes looking at the misery in the old man's face (for on his countenance his heart wrote his secret), Helen Illingworth experienced compunctions of conscience of her own, which she told to Rodney in default of other confessor. That fine young man appreciated fully the woman's feelings and understood her keen sensibilities, and his comprehension was a great comfort to her. He encouraged her to persevere. Since it was only through Shurtliff that the truth could be established, she must not falter nor reject any fair and reasonable means to gain his whole confidence and make him speak. It was, after all, simply a question of whether the game was worth the candle. How best could they expose or fight a deceit? And that the deception was for a noble purpose and to serve a laudable end in the minds of the deceivers did not alter that fact.

"You are doing nothing in the least degree dishonorable, Miss Illingworth," said Rodney, reassuringly. "Woman's wiles have been her weapons since the Stone Age."

"But I do feel compunctions of conscience occasionally."

"Personally I think you are abundantly justified," urged Rodney.

"Yes, to establish the truth, to give the man I love his good name would justify more than this," she replied, "and yet"—she smiled faintly—"my conscience does hurt me a little. The old man is beginning to love me."

"That's the reason it hurts you," said Rodney. "When he loves you enough he will do anything you want, as I would——"

The young man stopped, looked long at her, and then turned away with a little gesture of—was it appeal or renunciation? He was too loyal to his friend to speak, but he could not control everything. The tone of his voice, the look in his eyes, his quick avoidance of her, told the woman a little story. They had been very closely associated, these two. Rodney also had not had much advantage of woman's society, certainly not of a woman like Helen Illingworth. She had given him her full confidence in the intimacy. He was a man. He loved like others. She was too fond of him, too great, too true a woman to pretend.

"Mr. Rodney," said the girl, laying her hand on his arm, "that way madness lies."

"Miss Illingworth," said Rodney, turning and facing her, his lips firmly compressed, his eyes shining, "I'm devoted to Bert Meade and to you"—he lifted her hand from his arm and kissed it—"and I'm going to do everything for your happiness."

Brave words and he said them bravely.

"I understand," said the woman, "and I honor you for your loyalty to your friend and your devotion to me. Loyalty is not always the easiest thing on earth, I know."

"You make it easy for me because you understand."

So the fall and winter were filled with interest to Helen Illingworth and there was in her days no lack of hope. Every Saturday the flowers that Meade had arranged for spoke words of love to her and bade her

not forget, although that was admonition she did not need.

That was the only message that she received from her lover. He had dropped out of sight completely. They caused search to be made for him, sought tidings of him in every possible way, but in vain. Her heart almost broke sometimes at the separation. She had confidence enough in her power over him, and in her woman's wit, to feel that if she had only another opportunity she might learn the truth, force it from him, constrain him to tell it, because she loved him!

XXVI

ONCE MORE UNTO THE WORK

THE Martlet Bridge Company had finally weathered the storm, although it was, of course, not intrusted with the new International Bridge which was about to be commenced. When Bertram Meade read of the new undertaking, it cut him to the heart. This time there would be no mistake. In the necessity of recouping its fortunes, the Martlet Bridge Company entered upon an even wider career. The directors took contracts which they had hitherto disdained because they were comparatively unimportant, and they bid on operations which they had hitherto left to competitors. They cut the prices down to the lowest limit to get work, to demonstrate that the company was still a force to be reckoned with, a power to be considered in the engineering problems of the world.

They were building the great steel viaduct by the town of Coronado below the dam, and they had already built the splendid steel arch that spanned the ravine, here almost a gorge, in the valley of the Kicking Horse to the eastward of the big mesa.

After Christmas, Colonel Illingworth decided to make another of his tours of inspection, and as Helen was not looking particularly well from the strain under which she was laboring, he offered to take her with him, especially as he was going to the far Southwest, where the weather would be mild and pleasant, to inspect the

growing viaduct and the completed arch. She gladly availed herself of the permission. There was always a possibility, albeit a most remote one, that she might hear of Meade if she got in touch with engineering works, and here was not one project but three! Accordingly, feeling the value of his presence, she suggested to her father, in view of the wide extent of the trip and the important interest of engineering circles in the viaduct and dam and irrigation project, that it might be well to invite a representative of *The Engineering News*, to wit, Rodney, to accompany them, so that the really splendid work the Martlet Company was doing to regain its former high position might be made widely known. The party consisted of the father and daughter, Curtiss, the chief engineer, Dr. Severence, the vice-president and financial man, and Rodney.

Now Helen Illingworth had not the least reason in the world to suspect that Bertram Meade was in any way connected with this engineering project, but Rodney had pointed out and had imbued her with his own belief that sooner or later when Meade was found, he would be found engaged in engineering in some capacity.

"It's in his blood," said Rodney. "He can no more keep away from it than he can stop breathing. He can't do anything else. Somewhere he's at the old job. It might be in America, and it might be out there at Coronado, or it might be in South America, Europe, Asia, or——"

"I wonder if we can't find out all the engineering work that is being done in the world and send representatives to seek him," said Helen Illingworth.

Rodney laughed.

"To hunt that way would be like hunting a needle in a haystack. I cannot bid you hope that he is there; in fact I think it is most unlikely that he would be any place near where the Martlet people are operating, but there's a chance, even if only the faintest one."

Well, women's hearts can build a great deal on a faint chance. They are calculated for the forlorn hope. And so Helen Illingworth stood on the steps of the private car as it rolled across the mile-long temporary bridge at Coronado, and scanned the workmen grouped on one side of the track, their work suspended for a moment that the train might pass on the wooden trestling, in hope that she could see in one of them the man she loved and sought. And Rodney stood by her side, equally interested, searching the crowd with his glance, also.

There was nothing in the town to attract Helen Illingworth out of the car. She had visited West and Southwest many times. Colonel Illingworth, with Rodney and Severence, there left the train. They had, of course, business connected with the bridge which Rodney wanted to see and report upon. Miss Illingworth decided to go into the hills and get away from the arid and heated plains. A siding had been built near the steel arch under the slope of the hill from which the huge mesa arose. It would be pleasanter and quieter to side-track the car there. The siding was within two miles of the dam and the mesa was something to look at and something to climb. The Kicking Horse ravine and the Picket Wire valley presented rather attractive possibilities for exploration and adventure in their

pine-clad hills and the car was to be placed there. The men left behind would use the private car of the division superintendent of the railroad when they had ended their several tasks.

It had been raining dismally during the afternoon and when the car was detached and switched to the siding and left up in the hills some twenty miles from the town, it was too wet and uncomfortable to leave it. Disregarding the downpour, however, Curtiss, who had come up with it, made a very careful investigation of the completed steel arch bridge, which more than surpassed his expectations in its appearance of sturdy grace, as well as in the evidences of careful workmanship in its erection.

That evening the special engine pushed the other private car up from the valley, bringing the people who had inspected the bridge. A few more weeks would complete the great viaduct. Everything was proceeding in the most satisfactory way and Colonel Illingworth was very much elated over the situation.

"Who would have thought," he said as they sat down to dinner in the brightly lighted observation room, "that it would rain in this country at this season of the year?"

"It will probably be over by tomorrow morning," observed Rodney.

"If it continued long enough and rained hard enough that dam would have to be looked after. We'll go over and see it tomorrow," said the Colonel cheerfully.

"What would happen if it gave way?" asked his daughter.

"It would flood the valley, sweep away the town, and——" he paused.

"Well, father?"

"Ruin the bridge."

"We can't afford to have another failure after the International," said Severence.

Now there was a newcomer at the table, a big rancher named Winters, whom Rodney had met in the town and had introduced to Colonel Illingworth. The latter had invited him to dinner and to stay the night in the extra sleeper, and Winters, who had particular reasons for wanting to talk with Rodney and to meet Miss Illingworth, had accepted.

"You can count on its stopping," he said at last. "My ranch is a hundred miles to the north of here. I heard Rodney was with your party and as he was an old classmate of mine, in fact my best friend at Harvard along with Bert Meade"—and the mention of the forbidden name caused quick glances to be passed around the table, but raised no comment—"the chance of seeing him brought me down here. I know the weather along this whole section of the country, it's the driest place on earth, and I would almost offer to swallow all the rain that will fall after this storm spends itself."

"Well, that's good," said Curtiss, "because I've heard that the dam lacks a very little of completion but that the spill-way has been delayed."

"You'll find that the storm has broken in the morning," said Winters confidently.

After dinner Colonel Illingworth, desirous of talking business, called the men of the party, except Rod-

ney and Winters, back into the observation room of the other car, leaving the two men with Helen.

"Mr. Shurtliff," said Helen, as the men stepped out on the platform, the secretary following, since his employer had intimated his services might be needed, "if you can, I wish you would come back here as soon as possible."

"Certainly, Miss Illingworth," said the secretary, "immediately, if your father finds that he does not need me."

"Rod," said Winters when they were alone, "I'd go a long way to see you, but I might as well be frank. I did not come down these hundred miles, leaving my ranch in the dead of winter with all its possibilities of mishap to the cattle, simply to see you, or even Miss Illingworth here, although she's worth it," he went on with the frank bluntness of a Western man.

"Of course, you didn't," said Rodney, smiling. "I know I'm not a sufficient attraction."

"I came to talk about Meade."

"Mr. Winters," said Helen, clasping her hands over her knees and leaning forward, "if you know anything about him, where he is, what he is doing, how he fares, is he well, does he think of—I beg you to tell me."

"Miss Illingworth, there is nothing I would refuse to tell you if it rested with me."

"I don't mind confessing to you, you are such old friends, you and Mr. Rodney, and so devoted to Bert, that I am worrying——"

"You need say nothing more, Miss Illingworth. I know all about the situation. Rodney wrote me and——"

"Well then, you understand my anxiety, my reason for asking?"

"I do."

"And you will tell us?"

"I wish to God I could."

"Can't you tell us anything?"

"Well, yes, I can."

"What?"

"It may be a breach of confidence."

"I'd take the risk," said the girl, her bosom heaving. Was she at last about to hear from her lover?

"Know where he is, old man?" asked Rodney.

"I think so, not sure, but——"

"Where?" from the woman, breathlessly.

"I didn't agree to tell you that."

"What then?"

"All I can say is that after the death of his father he turned up at my ranch one day some five months ago and told me his story."

"What!" exclaimed Rodney. "Did he tell you he was innocent?"

"Not at first. He told me he was guilty."

"But you didn't believe him, did you?" asked the woman impulsively.

"I certainly did not."

"Why not?"

"Well, I don't know why. I just didn't, that's all. I know Meade. I know him well. I know his make-up. We get accustomed to sizing up a man's actions out West here and it didn't take me longer than it took him to tell the story to know that it wasn't true."

"Oh, thank you for that," said the woman.

"But our beliefs are not evidence, Dick," interposed Rodney.

"We can't prove it and that's the point. I told him," continued Winters, "that it was a da—darned lie—I beg your pardon, Miss Illingworth. I mean I told him that it was not true and that he was a fool for sticking to it, and—er—he—admitted—I—er," floundered Winters, suddenly realizing that he was on the eve of a breach of confidence and checking himself just in time. "In fact the subject was painful to him and I let him alone, which is what we generally do to a man who doesn't want his affairs inquired into too closely," Winters ended lamely, realizing how near he had come to betraying his friend's confidence and telling of Meade's own admission that he had said what he had to save the fame and honor of the father.

"Well, what next?" asked Rodney, understanding as did Helen Illingworth herself the ranchman's hesitation and respecting it, although the unavoidable inference gave her great joy.

"He hung around the ranch for a month or six weeks to get his balance. He was pretty badly broken up. I'm a bachelor myself and don't know much about those things, but I can say that he loved you, Miss Illingworth, more than life itself."

"But not more than the reputation of his father," she said with a little tinge of bitterness.

"Well, I take it he looked at that as a matter of honor. You know a man's got to keep his ideals of honor."

"Even at the expense of a woman's heart?" said the girl.

"It sounds hard, but I guess we've got to admit that. But that's neither here nor there," he continued, gliding over the subject, "the point is I found that he had to fight it out himself and I mainly let him alone. I gave him a horse and gun and turned him loose in the wilds. Best place on earth for a man in his condition, Miss Illingworth. You can go out into the wilderness and get nearer to God there than any place I know of. He came back finally, turned in his gun, borrowed the horse, bade me good-bye and said he was going out to make a new start."

"Where did he go? Which way?"

"He was headed south when I saw him last, and all this lay in his way."

"You mean——?" cried the woman.

"He may be here?" said Rodney.

Winters nodded.

"I have thought so. It's only a guess, of course, and probably a poor one. But when I read in the papers that Colonel Illingworth was coming out here and that you were along, and Miss Illingworth, I thought I'd just take a run down here and see what could be done."

"Oh, I'm so glad you have come."

"He's not working on the bridge," said Rodney.

"How do you know, Rod?"

"I examined all the payrolls and none of them bears his name."

"He wouldn't work under his own name in the Martlet Bridge Company," said the woman.

"Certainly not. That was only my first step. I went around among the workmen, too, and I got a look at every one of them. I'm sure he's not there."

"He wouldn't be a common workman, would he?" asked the girl, more disappointed than she could express.

"Certainly not. He'd be keeping track of material, or running a transit, or acting as a gang foreman. Most of the workmen are foreigners, although the bridge erectors are Americans."

"You're sure that he's not there?"

"Absolutely."

"There's the dam," said Winters. "We'll try that in the morning."

"What good is it going to do us, Dick?" asked Rodney a little irritably. "Even if we do find him, we can't make him speak."

"I don't know," answered the woman slowly. "But if I could just see him once again, Mr. Rodney"—she spoke without hesitation or reserve and both men felt deeply for her—"if I could just speak to him, if he would only——"

"I believe you can persuade him," said Winters.

"Yes, perhaps, but I want Shurtliff to speak first, then we can approach our friend himself with more confidence," said Rodney.

XXVII

BRUTE FORCE OR FINESSE

"WHAT do you want me to say, Mr. Rodney?" asked Shurtliff, coming through the door, having caught Rodney's use of his name.

"Oh, Shurtliff——" began Rodney, somewhat embarrassed at having been overheard.

"What do you want me to speak about?" continued the old man suspiciously, not giving the younger man time to finish. "And what friend can you then approach, sir?"

"I'll tell you what I want," said Rodney.

He quickly came to a decision. Standing up and facing the old man, he staked everything on one bold throw. Grasping the situation, Helen Illingworth held her breath. Winters moved to take his own part in the game at the proper time.

"What is it, sir?" asked the secretary.

"Shut the door and come in," was the answer.

Rodney spoke sharply and it was a sort of indication, characteristic of the difference in station between an independent young man and a subservient old man.

"Here I am, sir," answered Shurtliff, closing the door and standing before it.

He shot a quick glance at the young woman. He observed her tense position. He saw the emotions

that filled her soul in her face and bearing. All his old suspicions rose like a flood. For the moment he no longer cared for her. He almost hated her. He looked from her to the dark-faced, determined Rodney, to big, powerful, quiet Winters. Was this a trap? Were they going to try to force him to speak? He was a brave man, old Shurtliff, but his heart beat a little faster as he faced them. He was quite master of himself, though, cool, watchful, determined; in their eyes rather admirable than otherwise.

"The time has come for you to tell us the truth," began Rodney emphatically. "You know that the whole blame and responsibility for the failure of the International Bridge is loaded on the wrong man. You know that you permitted, and even made possible, the sacrifice of the reputation of the son for the sake of the fame of the father. You know that this girl here is breaking her heart, that Meade's life is ruined, and you're to blame. Now the time has come for you to speak. We know as well as you that young Meade is innocent. Here's our evidence."

He drew a handful of papers from his breast pocket and shook them in the face of the old man, who had shrunk back against the side of the car and stood staring, white-faced, thin-lipped, close-mouthed, inexorably resolved still.

"Read them," continued Rodney. "I'll admit to you that the whole thing would not be worth the paper it's written on in a court of law or even in a newspaper report, but it's convincing to us and you can make it convincing to everybody. You've got to speak."

"Do you think, sir, that there's any power in your

stretched out arm or in your rude voice or in your threatening gesture to make me speak?"

"By the Lord," exclaimed Winters, suddenly whipping out a Colt's forty-five from the holster at his belt—he was dressed just as he had been when he rode away from the ranch—"out West we've got ways for persuading men to speak and this is one of them."

Winters was a bigger man than Rodney. His life had been wild and rough and his manner when he wanted was according. He would fain add physical compulsion under threat of death to Rodney's mental insistence.

"And do you think, sir, that I'm afraid of any lethal weapon you can produce or even use, any more than I am of Mr. Rodney's words?" The old man's eyes flashed and his knees shook, but he had all the spirit of a soldier as he looked into Winters' stern face, full of threat and menace. His thin voice took on a certain quality of courage. It even rang a little. His courage was mainly moral, but there was some accompanying physical hardihood, that was undoubted. "You can beat me, you can even kill me, if you wish, but you can't make me say a word I don't want to say of my own free will," he cried out at last, his voice strangely rising.

"Gentlemen, gentlemen," said Helen Illingworth, rising and swiftly interposing between the secretary and the two angry men. She realized that the affair had gone far enough and that she must intervene. They had certainly failed lamentably, almost ludicrously. "You are wrong to threaten Mr. Shurtliff. He is old enough to be the father of either of you. Drop your

arm, Mr. Rodney. Put up that pistol, Mr. Winters. Mr. Shurtliff," said the girl quickly, "as I am in a certain sense your hostess and as you are in a certain sense my guest here, I apologize to you for the improper and impulsive conduct of these young men. They love Bertram Meade dearly as I do. Let that be their excuse. Meanwhile, they will apologize to you here and now, I am sure."

There was a moment of silence. Rodney and Winters stared at each other and both looked at the girl, confronting them so confidently in her superb and beautiful way. Winters smiled a little shamefacedly as he shoved his gun back into its holster. His had indeed been the greater offense.

"Mr. Winters, Mr. Rodney," said the girl insistently.

"Oh, I apologize. I suppose it was wrong to threaten him," said Rodney disgustedly.

"Hang it," said Winters, now utterly forgetful of conventions, "it wasn't the thing to do to draw a gun on a little, old man and I'm sorry I did it."

"And now that we've apologized you'll tell us the truth, won't you?" asked Rodney swiftly, with no appreciable change of manner.

"Yes, we beg it now, humbly," chimed in Winters, with anything but an humble air or voice.

"I won't have Mr. Shurtliff even appealed to now," said Miss Illingworth. "You have threatened him and you have apologized. Whether he forgives you or not is for him to decide, but he shall not be worried, or questioned, or insulted any more."

"Thank you, Miss Illingworth. I came for that

book on the desk; your father wants it," said Shurtliff grimly, bowing slightly to her.

He stepped a little tremblingly—the scene had been unnerving—past the young men, picked up the book, bowed again formally and unmistakably to Miss Illingworth alone, and went out of the car. The honors of the encounter were certainly his.

"Well, Miss Illingworth," said Winters, "I don't know whether you made a mistake or not. I think I could have scared it out of him with this little persuader of mine——" He tapped the butt of the pistol.

"You couldn't have done it if you had killed him," said the woman, who had read the old secretary correctly. "He isn't what I call a daring man, but he has courage that would take him to the stake rather than make him give way, the courage of endurance rather than of action. When he speaks, if he ever does, it will be of his own free will."

"Or because you may persuade him," said Rodney. "By Jove, when I think it over it was the finest thing you ever did."

"Bert Meade's a lucky fellow," said Winters. "You're the kind of a girl that ought to marry out West, where we try to breed men that will match up."

Helen Illingworth laughed a little, although she felt no inclination to merriment.

"That's a fine compliment," she said. "Well, this has rather shaken me and I'm going to ask you gentlemen to excuse me."

"We'll see if he is working on the dam tomorrow."

"You will stay all night, Mr. Winters?"

"Your father invited me to take a bunk in his car

and to be perfectly frank with you I'd sleep out in the open rain rather than miss a chance of being in on the end of a game like this."

The girl bowed and left them.

"Dick," said Rodney slowly at last as the two sat smoking together in the silence of complete understanding and good comradeship, which requires no expression in talk, "you're not the only man who thinks that girl would be a good wife to a man."

"Ah," said Winters, "sits the wind in that quarter, Rod?"

"Yes," answered the other, "but I'm fighting this thing through for Meade."

"Well, by George," said the big ranchman, "you're as good a man as Meade any day, fine fellow as he is. I wish I had some chance to get in on this game and make myself worthy of the two of you, let alone the lady."

It was a rare confidence that Rodney had vouchsafed to his friend, and like every other Anglo-Saxon, having said his say he did not wish to discuss it further.

"Do you know," he began, changing the subject abruptly, "I think things have turned out pretty well in spite of our foolishness a while ago. I believe if there's a spark of human gratitude in Shurtliff's heart the girl's interposition when you and I were threatening him, and her refusal to allow him to be questioned later, will fan it into a flame. And I have an idea that when he thinks it over he'll be about ready to tell."

"Are you sure he has anything to tell?"

"Certain."

"Well, I guess you're right. It sort of consoles

me for having drawn my gun, without using it, too. And if he tells in the morning and we find Meade everything will be lovely."

"For everybody but me," said Rodney.

"I'll tell you what, old man, when this thing's over you're coming out to spend the rest of the winter with me on the ranch. It's the greatest place on earth for a man to buck up. There's no woman within fifty miles."

Rodney laughed a little grimly.

"I'll go you," he said.

XXVIII

THE BATTLE FROM ABOVE

THE rain had stopped by morning, to the great relief of Colonel Illingworth, Severence and Curtiss, and the satisfaction of Helen Illingworth. There was little sun to dry the big, red sandstone mesa, its sides seamed into fantastic shapes, which rose grandly between the valley of the Picket Wire and the ravine of the Kicking Horse, and which the young woman intended to cross in her walk toward the dam with Rodney and Winters. The siding near the steel arch bridge was close to the rock wall of the ravine, which here had been so scoured out of the rocky side of the mesa by torrents of other days that it could fairly be called a gorge. Consequently the bank of clouds above the horizon to the northwest was hid behind the big butte from the occupants of the two private cars. Although the day did not promise to be fair, they had no idea of the further threat of storm presaged by the black masses to the northwest.

In sandy, porous soils such as here prevailed the rain is absorbed quickly. They could traverse the trails carpeted with the needles of centuries that ran through the dripping pines without getting muddy and with nothing more to fear than a wetting. Colonel Illingworth, Severence, and Curtiss announced their intention of going back to the town to continue their consultations and observations concerning the progress

of work on the bridge. Shurtliff, who went about his business gravely reserved, frigidly cold and self-contained, had work to do at his desk. The woman and the two young men were for the dam.

After an early breakfast, therefore, the second car was uncoupled and the engine backed it down around the mesa toward the viaduct twenty miles below. Rodney and Winters prepared to go with Miss Illingworth across the wooded island, with its cresting of stone, so to speak, that lay between the ravine and the valley. The conductor of the train, a local employee of the railroad, told them that the shortest way was directly over the mesa. The sandstone of which this huge mound was mainly composed had been broken and disintegrated on all sides by centuries of erosion and weathering and there were practicable ascents and descents at both ends. The nearest ascent was at the side of the big tableland directly opposite which the car was placed.

The trails through the pines which covered the hill up to the very foot of the big butte were unfrequented and in bad repair, but practicable if the traveler was prepared for a wetting. The shortest and on the whole the easiest way to the dam would be to make their way to the foot of the mesa, climb it through the big ravine and cross it to the lower end, less than two miles away, where there was an easy descent to the dam.

"And if you get caught in the rain," said the conductor, "which ain't likely, for it's already rained more in the last twenty-four hours than in the last twenty-four years, it seems to me, there's a hut, half stone and half timber, up on the mesa that campers some-

times make use of when they want to see the sun rise, which is a mighty fine sight from there. It was in pretty fair shape when I visited it last year and you can find shelter there. It's at the highest point on the mesa. You can see a long way up the gulch there, and a longer way down and up the Picket Wire valley. Above the dam it used to show a level, fertile stretch between the hills, but it's all a lake now."

Shurtliff, of course, declined Miss Illingworth's invitation to accompany the party on plea of urgent duties and important papers to prepare. He had spoken no words to Rodney or Winters, and those gentlemen made no effort to engage him in conversation. They were, in truth, a little ashamed of their actions of the night before. They were exceedingly anxious as to whether their theories as to the possible effect of Miss Illingworth's action would be justified, so they carefully avoided the secretary, letting the leaven work if it would. To their disappointment it gave no sign of life or action.

Of the four most interested in Meade, Winters was the only one who had slept soundly that night. Rodney was too much in love with the woman ever to sleep soundly again, he thought, certainly not until her future had been settled and her relations to Meade finally determined. Shurtliff's feelings were painful in the extreme. Torn between the old habit of affection for the dead, his new habit of affection for the woman, his oft recurring compunction of conscience, his immediate resentment of the treatment of the two men, his acknowledgment of the splendid action of the woman, his suspicions, his uncertainty, as to how the younger

Meade would take it if he told the truth, he slept not at all.

Into Helen Illingworth's mind also had come, although to her credit be it said not until she had retired and had thought over her action in the light of the hints given, that perhaps her generous interposition in behalf of Shurtliff might move his gratitude and that he might at last vouchsafe her the help which she felt more certain than ever he alone could give. She was glad when the thought came to her that she could look herself squarely in the face and declare to her conscience that it had not been back of her action, which had been purely spontaneous.

The possibility, although a faint one, that Meade might be working on the dam and that she might see him on the morrow would have sufficed to give her a wakeful night. Rodney was a more careful observer than Winters, but even the cattleman noticed that she looked worn and strained as he helped her out of the car for their tramp across the mesa to the dam.

"You know," he said, with rough and ready sympathy, "we haven't the least assurance that Meade is there. It's only a chance, and probably a long one."

"I shall never rest until it is decided absolutely one way or the other," said the woman.

"Well, I'm not much of a walker," said the cattleman. "I generally prefer to get over the ground astride of a broncho, but I guess I can keep up with the party for two miles, if that's the distance."

It was dark and damp and wet under the pines. As the conductor had said, the trail was an execrable one. Although the two men cleared the way for her, holding

branches back and shaking the water off the drooping boughs, it was well Helen Illingworth was protected from the wet. She had tramped hills and mountains many a time, camp and forest were familiar to her. She wore a short-skirted dress, stout boots and leggings, and a yellow western slicker.

The exertion of the upward climb, stumbling over broken branches and uprooted logs and floundering through boggy places on the trail, brought a touch of color to her face, and though damp, the air sweet and fragrant, clean and pure, refreshed and pleased her greatly; the men, too. It was a hard pull and she was out of breath when she reached the broken coulée, or ravine, which led to the top of the big red sandstone plateau.

"I'm terribly out of practice," she said to the two men, "but I don't believe I'm in any worse state than you are, Mr. Winters."

"I told you I wasn't any good on foot," said Winters, who was blowing like a grampus.

Rodney laughed at the two of them.

"Look at me," he said. "I'm as fresh as when I began."

"Well, you're used to walking," returned Winters. "It's this plugging along this broken trail that has knocked us out. The rich, they ride on—bronchos, you know."

"When we get on top of the mesa we will find it easier going," said Rodney encouragingly.

"Let us start," said the girl, suddenly serious, as she thought what might be at the end of the journey.

"Before we go any further," said Winters, staring

up the ravine at the sky which showed above it, "just take a look at that."

He pointed to the black clouds rapidly rising, apparently against the wind, which swayed rather violently the tops of the tallest pines, although they were protected and in comparative quiet where they stood in the ravine.

"It looks as if there were more rain there," said Rodney.

"It's incredible," answered Winters, "after what we've had."

"But it certainly is coming down again and if I'm any judge it will be another cloudburst."

"Perhaps we'd better go back," suggested Winters to Miss Illingworth.

"Go back!" exclaimed the girl. "When I'm as near as this?"

"But it's only a possibility, you know."

"Possibility or not it would take a deluge in my path to stop me. Come."

She stepped toward the broken ravine. Rodney sprang before her. Winters brought up the rear. It was an entirely practicable climb, but rather a hard one on the wet, crumbling rocks. It did not take the three young people long to surmount the difficulties, however, and after a few minutes they stood on top of the mesa. It was bare of vegetation, save in scattered little earth pockets, grass-covered, where dwarfed pines grew, stunted trees centuries old. Its general surface was level, but the upturned expanse was seamed and guttered in every direction like the wrinkles in a face that had confronted the sky for how many thousand

years no one knew, for the rock was the early old red sandstone of the triassic period.

Near at hand was the hut of which the conductor had spoken. It stood upon a little rise above the general level and from it one could obviously see far in every direction. There ran valley and gorge, there extended the high waters of the new-made lake, already dark under the clouds. Before them rose hill on hill, each overtowering the others until they merged into the highland of the great rampart-like range, its serrated peaks showing whiter their crowns of snow against the blackness of the heavens. Between the hills and over the lower crest of Baldwin's Knob they could even see dimly the far-off plains, a little sickly yellow light still lingering there before the advance of the storm.

The hut was made of stone and logs. The doors and windows had long since vanished and the broad eaves overhanging the walls were rotting away, but the inside they found upon inspection was fairly dry. They had not any more than reached it before the storm began. Claps of thunder, flashes of lightning under which the army on the dam were fighting, were heard and seen with tenfold clearness by the little group on the huge upland.

It was a sight to awe the very soul of humanity. Miles and miles down the mountain side and among the hills the whirling battalions of clouds rolled and tumbled and tossed and clashed like aërial armies. The lightning, while it was not in sheets, was practically continuous, flash succeeding flash in uncountable and blinding succession. Again they noticed the strange coruscating, bursting effect as bolt after bolt apparently struck some granite ledge and was then thrown back in

splinters of fire. The heavy awful roll of the thunder was continuous and terrific.

They stood staring through door and windows in silence, Meade and their quest forgot in the appalling tempest by all except the woman. It was she who recalled them.

"Let us hasten on," she said, and she had almost to scream to make herself heard in the wild tumult. "It's magnificent, wonderful, but——"

As a matter of fact all the manifestations of nature at its grandest would not have sufficed to turn her head away from her lover's face if she could have seen him.

"You can't go now," said Winters decisively, "the rain's bad enough as it is and that cloud will burst in a minute. Old Noah's flood won't be a circumstance to it."

"I'm protected from the rain," she answered.

Winters shook his head.

"The weight of it would almost beat you down, Miss Illingworth."

"I haven't had any experience with it, but I think Winters is right," said Rodney.

"I'll go on alone, then," said the girl passionately, stepping out of the house, "if you gentlemen don't care to come."

The next moment, with a culminating scream like the shriek of all the lost souls of creation heard above the furious detonating roll of the thunder, the wind added its quota to the demonstration of natural force, and now the rain fairly dropped upon them in apparently solid sheets. Of course clouds do not burst. Such a thing is scientifically and meteorologically impos-

sible, but anyone who has ever experienced the suddenness and fury and weight of a western deluge in a normally dry land will understand the term. The wind swept over the plateau where it had free course like a hurricane; the rain came down in masses apparently. Until their eyes became accustomed to it, the falling water blotted out the landscape.

The woman was hurled against the side of the house by the sudden and violent assault of the hurricane. The two men half dragged, half carried her around to the lee side of the cabin. The roof of the hut had given way here and there, and within it was soon flooded. Where they stood, however, by chance happened to be the solidest part of the overhang of the roof and they were in some degree protected, that is from the direct violence of the downpour. They were, of course, drenched in a few minutes in spite of their raincoats. With one man on either side of her to give her as much protection as possible, the woman leaned against the stone wall and stared through the rain down the valley, seeking to see the dam, perhaps a mile and a half away. Of course the maximum of the downpour could not last any more than the maximum of the gale, but the deluge was succeeded by a heavy driving rain still swept on by a strong wind.

Below the mesa the lake was whipped into foam by the beat of the rain and rolled into waves by the assault of the wind. All three of them knew what this deluge portended. The downpour would raise the level of the lake so that it would overflow the dam, which would be swept away, the valley would be inundated by a flood, like a tidal wave, the incompleted viaduct would be ruined, the

town would be overwhelmed, the loss of life and property would be appalling.

"The spill-way ought to take it," shouted Winters, knowing what was in the minds of the other two by what was in his own.

"It's not finished," roared Rodney.

Winters threw up his hands.

"Will the dam hold it?" cried the woman, understanding.

"Until the water rises above it. Just as soon as it begins to wash over it will go, and the quicker for these waves," answered Rodney at the top of his voice.

"And the bridge and the town," screamed the woman.

"They, too."

"And father?"

"He'll be all right, they've had warning. The engineers on the dam must know the danger now. They're working like mad."

He had brought a small six-power field glass with him and he was straining his eyes through it. The violence of rain and wind had sensibly abated, although it was still coming down in torrents. With his knowledge of what would probably be attempted, Rodney was able to see through his glass something of what was being done even at that distance.

"They're building palisades on top of the dam and backing it with an earth mound. See, they are dropping sand bags over," he stated, handing the glass to the other man.

"By heaven," shouted Winters, "they're making a magnificent fight."

In his excitement he left the shelter of the hut and

stalked through the rain toward the edge of the mesa, where he could have a better and nearer view. In spite of Rodney's remonstrances, even though backed by his outstretched arm, the woman followed. Presently all three, indifferent to the beat of the rain and the assault of the wind, stood watching the battle on the dam. It was abating still more, fortunately, or else they could scarcely have sustained the attack of that wind and rain, nor could they have seen at all, even with that glass.

Staring down at the dam after a moment Helen Illingworth took the glass from Rodney. She focused it rapidly and looked steadily through it. She knew what she was seeking as she stood steadying herself with splendid nerve and resolution and swept the length of the dam back and forth.

"I don't see him. He's not there," she said at last, handing the glass back to its owner.

"If he were there, you'd see him all right," said Winters enthusiastically, "because he'd be in the thick of the fight."

"I doubt if you can recognize anyone even through the glass, at such a distance," said Rodney, after he had focused it and taken a look himself. "Yet if he were there he certainly would be in the thick of it. He's that kind. You look, Dick."

"I can't see him," said Winters in turn. "But what a fight they are making to save that dam."

"Will it hold?" asked the woman.

"Impossible," said Rodney.

"I give it one hour," said Winters, handing over the glass.

"Not more than that," assented the other, after another look. "See for yourself, Miss Illingworth."

From where they stood high up on the roof of the world they were spectators of a great battle, witnesses of a terrible contest, in which herculean effort, desperate courage, human will, all exerted to the limit, finally degenerated into blind, mechanical habit of continuous and frenzied endeavor. The spirit of reckless continuance had got into them and moved them to the impossible. As men in a battle-charge go on even with wounds enough to kill them in ordinary circumstances, as soldiers at Winchester, though shot in the heart, actually struggled after Sheridan until they fell, or even as a common horse may so be imbued with blind intensity of determination that he gallops on until he drops dead, so these men gave their all in unmatchable persistence.

"They'd better get off that dam," said Rodney. "When it once fails it'll go with a rush and then it'll be too late."

"Look at them. They're not going to get off," said Winters. "They're going down with it. Damned fools, God bless 'em!" he shouted, throwing up his arms in exultation over manhood and courage and determination.

"Perhaps you had better go back, Miss Illingworth," said Rodney, thinking of the horror she might witness at any moment.

"I wouldn't be elsewhere for the world," said the brave girl, white but with firm lips—she was made of the same stuff as the fighting men, it seemed—"Even if he were there, fighting that great battle, I should wait to see the end."

"We're not the only people in this wilderness. Look yonder!" cried Winters.

He pointed down through the ceaseless rain toward the lower edge of the mesa. There far below him were three sodden figures. The water in the lake had risen so that it had overflowed the lowlands, it had flooded the slope of the hill and on that side it was lapping the base of the cliff. The trail had, of course, been covered and there was no way of progress except by taking advantage of the broken rock at the foot of the cliff, which here and there still stood above the water. It was a place apparently where men could only pass by carefully choosing their way and calculating the distance of the next point toward which to leap.

These three were moving like madmen, splashing through the water, hurling themselves from rock to rock, falling against the wall, clutching a tree or shrub, slipping into the lake, saving themselves from drowning apparently only by the caprice of complacent fortune, which they were trying to the utmost limit. They had raincoats on; two of them, however, had lost their hats, the light slicker of the last one was torn to rags; the first stopped a moment, jerked off his coat, and went on without it as if the stiff and sodden garment impeded his action.

One man carried a miner's pick, a spade and a surveyor's range pole, the other another spade and two long stakes which looked like the separate legs of a tripod. The bareheaded man, who had thrown his rubber coat down in the reddish-yellow water, carried a good-sized oilskin bag. He was the most hurried of the three. He ran some distance in front of the others. They

noticed how carefully he sought to protect the bag. When he slipped or seemed about to fall he always thrust it frantically away from the rock with outstretched arm.

What the three men would be at of course no one knew. It was obvious that they were in a desperate hurry and that the thing in the bag must be carefully carried. Naturally the watchers connected the men with the dam builders. They were dressed as the men engaged in such labor would be dressed. The pick, the spades, and the pole and stakes bore out that conclusion.

"What's in the bag?" asked the woman.

"He carries it as though it might be gold or diamonds," said Winters.

Rodney shook his head. Suddenly he divined the reason for the extreme care with which the bag was carried. The men were immediately below the three watchers now. He could make out pretty well what was the size and shape of the objects that bulged the waterproof bag.

"I have it," he shouted. "Dynamite."

"What for?"

Rodney shook his head again. The man in front was in plain view. He was a tall figure, his face was heavily bearded. From the angle at which they saw him it was impossible for them to recognize him, nor was he in his frantic progress assuming the usual attitude and bearing of a man under ordinary conditions which sometimes betray him to those who know him well. Nor could Helen Illingworth with her trembling hands focus the glass, which she took from Rodney before the

struggling adventurers had passed; and yet there was something in the figure below that made her heart beat faster.

She pressed her hand to the wet garments over her heart and stared. Suddenly Rodney raised his voice and shouted at the very top of it. Winters joined in and even Helen Illingworth found herself screaming. The three men below were not more than five or six hundred feet away, but evidently they could not possibly hear in that tumult of nature. No voices would carry through any such rain and wind. They were too intent on their paths and on what they had to do to look upward. They rounded the shoulder of the mesa and disappeared in the pines at its feet.

The three on the top looked at each other.

"The dam still holds," said Rodney, quite unsuspecting what was in the woman's heart.

Even as he spoke Helen Illingworth turned away. She ran heavily in her sodden garments along the broken mesa top past the house to the upper edge. There below her were the three men just emerging from the fringe of trees. Rounding the end of the mesa they had at last struck firmer ground. Helen Illingworth could see them through the pines on the old trail. The going was bad enough, but it was nothing compared to what they had passed over and presently they burst out of the woods and ran along the greasy, well-rounded hog-back that divided the valley from the ravine.

The woman had no idea what was toward, what was their purpose. She could only stare and stare at the rapidly moving far-off figure indomitably in the lead

and the others following after. There Winters joined her.

"Rodney sent me to look after you; he feels that he must stay back and watch the dam for his paper."

"Look," said Helen, pointing far down. The men halted at the very narrowest part of the hog-back. They were clustered together. The bag lay on the ground behind them. One man bent over it, evidently opening it. Another man swung the shovel viciously, the third grabbed the pick. Winters had been too far removed from engineering even yet to figure out what was toward. They could only watch and wonder.

XXIX

THE VICTORS

MEADE knew that they were fighting a losing battle. Every one of the higher grade men knew it also. The spill-way was entirely inadequate, but it suddenly flashed into his mind, with that consciousness of the hopelessness of the struggle, that perhaps there was another way to discharge the flood. The same idea might have come to any other of the more intelligent of the men from Vandeventer down if they had taken a moment for reflection. If they had not been so frantically, so frightfully engrossed in their present puny but gallant efforts to save the dam they certainly would have remembered. That the possibility came to Meade rather than to any of the others was perhaps due to the fact that he had noted the situation later and had studied the conditions more recently. Those solitary rambles of his, those careful inspections of the terrain of the valley, had been made long after the original surveys and the results of his observations were still fresh in his mind.

The water was rising so rapidly since the cloudburst and he saw the inevitableness of the failure so clearly that he did not dare to waste time to look up Vandeventer, tell him his plan and get his permission. Every second was of the utmost value. When the thought came he acted instantly. He was in the position of the commander of a small force to whom is suddenly

presented the bare possibility of wresting victory from defeat by some splendidly daring and unforeseen undertaking. And he was the man to seize such a possibility and make the most of it.

It was well that he had endeared himself to some of the men and that the respect in which he was held by Vandeventer was shared by the others. Indeed perhaps the men under a man are quicker to estimate his character and worth than those over him. Therefore when Meade called two of the most capable of the workmen, a big, burly Irishman and a stout little Italian, to follow him they did it without a moment's hesitation.

"The rest of you keep on here," he shouted as he left the gang. "Murphy and Funaro, come with me. Keep it up; I think I know a way to help," he yelled back through the rain as he scrambled off the dam up the rocks to the spill-way. It was not his fault that they could not hear and could not understand.

The water was rushing through the spill-way about knee deep and the three men plunging forward through it had difficulty in keeping their footing on the broken, rocky bottom. When they reached the other side, Meade shouted above the storm:

"Murphy, bring your pick and shovel; take that iron range pole, too. Here, Funaro, you take your shovel and these."

As he spoke he ran into the office shack and wrecked a transit tripod, ruthlessly separating the legs from one another by main force and pitching two of them into the little Italian's outstretched arms.

Without a question both men complied with his direction. In a huge crevice, almost a small cave, in the

spur of the mesa which overhung the east end of the dam the explosives were stored. The dynamite was kept in oilskin bags, the detonating caps in waterproof boxes. There were sixteen sticks or cartridges in each bag. Each stick was an inch and a half in diameter and eight inches long. One bagful should be ample. Indeed if that did not do the work the attempt would fail.

The men waited while Meade selected a bag of dynamite, a box of detonators, and a package of fuses. It was a cardinal rule that dynamite cartridges and detonating caps should never be carried by the same person, because the combination so greatly increased the risk of premature explosion. The fulminate of mercury in the detonators was very volatile, highly explosive and immensely destructive considering its size. One such cap could blow off a man's hand or even his head and in its explosion might detonate the dynamite. Hence the separation when being carried.

Meade decided to take that risk. He knew how perilous was the undertaking, how liable he was in his hurry to fall against the rocks, slippery and half submerged in that pouring rain. He knew what the consequences of such a fall would be. He would center all risks in himself. He thrust the box of detonators in his pocket, the package of fuses inside his flannel shirt, and carried the dynamite bag in his hand. He would need his free hand to protect himself, so all the tools were carried by the other men.

The little Italian shook his head as he noted these preparations. He happened to be one of the explosive force, those whose duty it was to do the blasting. In

his practical way he knew a great deal about the properties and possibilities of usefulness of the dynamite. Meade's purpose was obvious even to Murphy, who was only a laborer, though where he proposed to work neither man had any idea at all.

"Dynamita no work in zis weather," said Funaro impressively.

"Probably not," answered Meade, hurrying his preparations, "but it's our only chance."

"Give me ze caps," urged the Italian gallantly.

"No, I'll take both."

"It ees danger."

"Yes, but come on."

Meade, wasting no more words, sprang at what was left of the trail and the two men gallantly followed him. The hog-back at which he was aiming was perhaps a little more than two miles from the dam. On the ordinary trail and prepared for the run he could have managed it in fifteen minutes; as it was they made it in thirty. The extreme possibility of the life of the dam seemed to Meade not much greater. He went in the lead and by his direction the others kept some distance behind him.

"If I fall and explode this dynamite there's no need of all three of us being blown up," he had said, and it was no reflection on their courage that they complied with his direction.

Indeed a stern command was necessary to keep the two men back. They had caught something of the gallant spirit of the engineer and the big Irishman and the little Italian were as eager as he. Helped by a few hasty words as they ran, they had both of them

learned what he would be at. They both realized that they were the forlorn hope, that if they could not save the dam nobody and nothing could. And there was a trace of the age-long rivalry between the Celt and the Roman. The scion of the legionary and the son of the barbarian who had fought together in the dawn of history vied with each other then. Again and again Meade had to order them back. He was keenly sensible of his danger. He knew that if he fell, if the dynamite struck the ground violently, it might explode. He knew that the unstable fulminate of mercury in the detonators might go off at any time—perhaps that was the greater danger—but he never checked his pace or hesitated in a leap or sought an easy way for a second. His soul was rising and his heart was beating as they had never risen or beaten in his life. And the hearts of his men beat with his own.

He knew, of course, if the dam went out the railroad, the bridge, the town, the citizens, the women and children, and everything and everybody would go. If he could save them his act might be set off against the loss of the International. But whether that were true or not, whatever the consequences to him, he was bound to save them. The weight of every man, the weight of every woman, the weight of every child in the valley, the weight of all the business enterprises of the town, the weight of the great viaduct of steel, the weight of the huge dam itself, was on his shoulders as he ran. He carried the burden lightly, as Atlas might have upborne the world with laughter. For despite his determination and haste he had in his heart the great joy that comes when men attempt grandly and dare greatly

for their fellow-men. If he could only by and by see his hopes justified by success his happiness would be complete.

And there were thoughts personal as well as general. If he died, whether successful or not, men would tell about his endeavor. She would hear. It came to him afterward, when he learned how she had looked down upon him as he ran, that he had somehow felt her presence, not a presence impelling him to look up, but a presence driving him on. He lost his hat, he tore off his long coat and threw it aside as he plunged on with his precious bag in his hand. He did not dare to look at his watch, he did not stop for anything, but it seemed that he must have spent hours in that mad scramble over the water-covered rocks. He heaved a deep breath of relief when he rounded the mesa and struck the trail. Bad as was the going, it was nothing to what they had passed over.

Presently he broke out into the open slope and there before him was the rounded curve of the hog-back, to gain which he had risked so much. Were they in time? Yes, the water in the lake was not flowing, it was only rising. Evidently the dam still held. He ran along it till he reached the narrowest part of it, twenty feet wide between water-covered valley and sharply descending ravine. The shortest separation between Picket Wire and the Kicking Horse! The water in the lake was within three feet of the crest. The rain was coming down steadily. He could realize by the water level where he stood that it must be lapping the top of the dam now, or a little above it. He had five minutes, ten at most. He was still in time. The

thoughts came to him as he ran. And as he saw the place again he made his instant plan.

He laid the dynamite down just as Murphy and Funaro reached him and stood panting, their heavy breathing, the sweat mingling with the rain in their wet faces, evidencing their exhaustion. From Murphy, who had been the faster, Meade took the two tripod legs, stout oak staves about an inch and a half thick with sharp metal points. He jammed them down into the ground about five feet from the edge of the Kicking Horse ravine and about fifteen feet apart.

"Holes, there," he shouted, "deep enough for five cartridges."

Funaro nodded. He knew exactly what to do. Murphy had often seen the explosive gang at work. He was quick-witted and he had only to follow the Italian's actions. The work was simple. Seizing their spades the two men cut into the sod, using the pick to dislodge small bowlders and break up the earth. The soil was light and porous and it had been well soaked by the rain. After they had made an excavation about two feet deep they laid aside their shovels and with the iron range pole as a starter and the bigger tripod stakes to follow they made two deep holes in the ground, forcing the pole and then the stake into the earth, which the continuing rain tended to soften more and more. They made these holes about four feet deep below the excavation, driving in and twisting and churning the stakes by main strength.

They could by no means have accomplished this save for the softening assistance of the rain and the furious energy they applied. They had been working since

four in the morning at the dam, they had made that difficult run at headlong speed, yet they labored like men possessed. They even wasted breath to call challengingly and provokingly and to set forth their progress each to the other. In almost less time than it takes to tell it they had completed the holes and so informed the engineer triumphantly.

Meade, as usual, had reserved to himself the more dangerous, if less arduous task. Covering himself with big Murphy's discarded slicker, which fell over him like a shelter tent as he knelt down, he opened the box of detonators, selected one and attached the fuse in position carefully. Then he unfolded the paper about one of the cartridges and placed the detonator, wrapping the paper around it thereafter. He prepared two cartridges this way with the greatest care.

The holes now being ready, the men rapidly but carefully cut slits in the covering of the cartridges and lowered four cartridges down each hole, forcing them gently into place with the butt ends of the tripod stakes and compressing them so that they filled the holes completely. Then Meade placed his two prepared sticks with the detonators on top of the other four. He cut the fuse to the proper length in each case and, keeping it carefully covered with the raincoat, he held it while the others filled in the holes and the excavations and carefully tamped down the earth. All that remained was the lighting of the fuse. And then? Would the dynamite go off? With fuses it was uncertain in its action at best, and although these fuses were supposed to be so prepared as to be independent of weather conditions, more often than not rain spoiled

a blast. If this blast failed it was good-by dam—good-by everything.

Meade drew out from the pocket of his flannel shirt a box of matches. He had to light the farther cartridge fuse, then run fifteen feet and light the nearer one, and then make his escape. He had made the nearer fuse a little shorter so as to secure a simultaneous explosion if possible.

Tony Funaro now interposed gallantly.

"Giva me da light," he demanded, extending his hand.

"G'wan wid ye," shouted the big Irishman eagerly; "lemme do it, sor."

"Stand back, both of you," cried Meade, succeeding after some trouble in striking a match.

He had cut off a short length fuse for a torch, the better to carry the fire from one blast to another. As it sputtered into flame he touched the first fuse, then the second and turned and ran for his life after Murphy and Funaro. They had just got a safe distance away when with a muffled roar the two blasts went off nearly together. When they ran back they saw that two-thirds of the hillock on that side of the ravine had gone. A wall of earth through which water was already trickling rose between the great gap they had blown out and the lake, the upper level of which was much higher than the bottom of the great crater they had opened.

"Hurrah," yelled Meade, the others joining in his triumphant shout. "Now, men, another hole right there," he pointed to the foot of the bank. "Drive it in slanting and it will do the job."

"Will the dam be after holdin' yit, sor?" asked Mike Murphy, seizing his pick.

"I hope so, but for God's sake, hurry."

With two men working the last hole was completed before Meade was ready. Funaro, indeed, came to his assistance in preparing the cartridge. Presently all was completed. Rejecting the pleas of both men, Meade struck the match and this time, since there was but one blast to be fired, he touched it directly to the fuse and waited a second to see that it had caught and ran as before.

At a safe distance they drew back and waited. Nothing happened. A few seconds dragged on. They saw no sign of life in the fuse, no light. In spite of the care they had taken it had got wet. It would not work. The precious moments were flying. They stared agonizingly at the fuse through the rain.

"I'll have to take a look at it," said Meade desperately.

Funaro and Murphy caught him by the arms. They all knew the tremendous risk in a nearer approach. The fuse might be alight still. At any second the flame might flash to the detonator and then—— Yet Meade had to go. That charge had to be exploded if he detonated it by hand, he thought desperately, and he had not come so far and worked so hard to fail now.

"Don't go," cried Murphy.

"It ees danger," shouted Funaro.

But Meade shook them off and bade them keep back. What was his danger compared to the issue involved? That last charge had to be exploded. He stepped quickly toward it and as he did so he threw his eyes

up toward the gray, rain-filled heaven in one last appeal.

Did he hear the blind roar, did he see the upbursting masses of sodden earth, was he conscious of the fact that the whole side of the hillock had been blown away, that the last explosion had completed the shattering work of the first, that they had succeeded? Did he mark the whirling water, driven backward at first by the violence of the explosion, returning and rolling in vast mass through the great opening, did he see it plunging down the slope, through the trees and bushes, and pour thunderously into the bed of the ravine? Did he see the tremendous rush of the water from the great lake that man had created tear earth from earth and ever widen and deepen the opening as it crashed in a foaming, terrible, red cataract through the outlet, striking down great trees, roaring, boiling wildly to the bottom of the gorge far below?

No, he saw nothing. Broken, beaten down by a huge bowlder that had been thrown upward by the explosion and had struck him on the breast, and lying battered under a rain of smaller stones and earth, he was as one dead.

"By God," cried Winters in great excitement on the crest of the hill, "he's done it. He's saved the dam; that's a man."

"Don't you know him?" screamed Miss Illingworth in his ear.

"No."

"Meade!"

Winters caught her by the arm.

"He's dead," she cried high and shrill, "but he

saved the dam and the bridge and the town. He's made atonement."

"Yes, yes, don't faint," cried Winters.

"Faint! I'm going to him."

"How?"

"The nearest way," screamed the woman, letting herself down over the cliff wall to the broken rocks, by which only the hardy could reach the lower level.

* * * *

What of the dam below in the valley?

"Hold it, men, hold it; for God's sake, hold it," shouted Vandeventer, rising from his crouching position against the palisade to resume it instantly he had spoken. "Keep it up. If it goes down let's go down with it. Damn it to hell, hang on—hang on! We'll hold it. We aren't beat yet."

Broken words, oaths, protestations, curses, cheers, expletives in strange languages from the polyglot mob of men burst forth. Even cowards had been turned into heroes because they had fought by the side of men. Here and there a man not weaker physically perhaps, but less resolute, less spiritually consecrated, less divinely obsessed, dropped out of the rank that pitted itself in furious, futile, but sublime fury against the wavering wall. Some of them fell backward and lay still. Some had fainted and some of them were half dead. A few here and there sank down on the trampled, muddy embankment and buried their heads in their hands, sobbing hysterically. But most still blind, mad, sublime, held on. And the palisade did not fall. It did not bend back any further.

The throb that told of the tremendous pressure of

the waves, the quiver that experience could feel the prelude to failure, began to die away, to stop. What did it mean? The thunder grew still, the rain diminished, it ceased, the clouds broke. Some great hand, as of God, swiftly tore the black vault of the heavens apart. Faint light began to glow over the sodden land. Through the rift they saw dimly one great peak of mighty range. What had happened?

"Here," said Vandeventer.

How white he looked, how haggard, streaks of gray in his black hair that had not been there before, but his eyes were blazing. He was still the indomitable chief of the Spartan band. The nearest men gave him a hand. He clambered up to his former vantage point on top of the highest log of the stockade and stared down. The rise of the water had stopped! He could not believe it, yet it was true. The rain had ceased again, but by every natural law the drainage from the hills would continue for some time in full volume. Yes, by all rights the dam was doomed. The water still trickled through the palisades in many small streams. That had been a gallant effort they had made, even if a vain one.

For ten minutes he stood silent, exhausted. Then he saw. The water was not rising. No, it was falling; only a trifle, but enough. Presently it had stopped filtering through the revetment. He looked back. Not a drop ran on the other side of the palisade. Vandeventer knew that the water must be discharging somewhere. The lake must have broken through somewhere. He only needed that hint to recall the hog-back and then Meade. He saw it all now.

"We've won, the dam's saved," he cried greatly to the men who stood back of the palisade staring at him. "Roberts has blown up the hog-back. The water's falling. See for yourselves."

Every man sprang up the palisade. Some one laughed and then some one raised a cheer and those mud-covered, sodden, wornout men, who had been about to die, saluted in heroic acclaim him who had led them to victory and by implication him who had made that triumph possible.

XXX

THE TESTIMONY OF THE DEAD

JUST as Helen Illingworth and Winters reached the lower level at the foot of the mesa they were joined by Rodney.

"What has happened?" cried the engineer.

Winters answered as the three hurried along without stopping:

"Meade blew up the hog-back."

"Was that he?"

"Yes."

"I thought there was something familiar about him, but I did not dare——"

"I recognized him instantly," said Helen Illingworth.

"That atones for the International," continued Rodney.

"What does?" asked his friend.

"The dam is safe; the water has stopped rising. I believe it's beginning to fall a little. I saw someone jump up on the palisade and wave his hand and then I saw them all gather around, evidently cheering."

"I should think the water would be lowered," said Winters; "it's pouring out of a hole in the hog-back as big as a church."

"It was a fine thing in Meade. Let's hurry and tell him so," answered Rodney.

"I'm afraid it's too late," said Winters.

"Oh, don't say that," cried the girl.

"Why, what's happened?"

"The second blast was slow in going off," said Winters; "he went back to look at it and got knocked over. It looked pretty bad from the top of the mesa."

Rodney would not have been human if he had not felt a leap in his breast at the possibility, but he was too loyal a friend and too genuinely fond of Meade for more than a passing emotion, for which he was more than a little ashamed.

"Let us press on," he urged.

In a few moments they stopped by the three men. Meade was still unconscious. The big Irishman sat on the grass with the engineer's head on his knee. The deft-fingered little Italian was trying to wash the blood away from the unconscious man's forehead with a sodden, ragged piece of cloth. Meade was unconscious, he was breathing heavily. There was a catch in his respiration. His breath came at irregular intervals and was labored as if painful.

A huge rock had struck him in the breast. The two men had torn open his shirt and undershirt. The engineer's chest was bruised and bloody. Evidently bones had been broken and probably serious internal injuries had resulted. Every breath was an apparent agony and that the exquisite pain did not arouse him to consciousness was evidence of the terrible nature of the injury. A smaller, sharper rock had cut him across the forehead and cheek, just missing his right eye, and they found out afterward that he had been struck by several other pieces dislodged by the explosion, and that his body was covered with bruises.

But there was nothing, not even in the cut on the forehead, to cause any great alarm had it not been for the crushed chest. Winters and Rodney were both men of action, accustomed to quick thinking and prompt decision in emergencies; while Helen Illingworth could only stand with clenched hands staring in mental anguish that paralleled the physical suffering of the man she loved, the engineer and the rancher immediately made preparations to get the wounded man to the car.

Murphy wore in his belt a short woodman's axe. With it they cut down two young saplings, trimmed them and thrusting them through the sleeves of their raincoats they made a fairly practicable litter. Using the utmost care, they laid the unconscious man upon it and Winters and Murphy, the two biggest men, took the handles at either end. Helen Illingworth, praying as she had never prayed before, sought to support the unconscious man's head. The Italian gathered up the tools and went ahead to open up the path. Rodney followed after.

Their progress was slow of necessity. They had to handle Meade with great care. Winters and Rodney, after the brief inspection they had made, could not see a chance on earth for him. Neither could Helen Illingworth. They went along without conversation, naturally, except for an outburst of admiration from Winters.

"I tell you," he said, "it was a magnificent thing for him to do. He risked his life a hundred times in that mad rush with the dynamite in his hands and the

detonators in his pocket. Yet if he had only stayed back he would have been safe."

"It was his anxiety for the dam and the people that brought him down," said Helen Illingworth. "He can't die," she murmured. "God surely will not let him die. I love him so. And yet if he does and I have lost him, innocent or guilty, he has redeemed his fame."

"He saved others," quoted Rodney under his breath, "himself he could not save."

It was a work of great difficulty to get the wounded engineer into the car, but they finally managed it. By the woman's direction they laid him on her bed in her own private stateroom.

"One of us must go for a doctor at once," said Rodney, "and that will be my job."

"It's twenty miles to the town," said the conductor, who had helped to receive them. "If one of you could telegraph we could tap a wire."

None of them could.

"It's all down-grade and there's a good roadbed and I was some sprinter in my college days," said Rodney.

"And there was never greater need for haste than now," said Winters. "I wish I had a horse here."

"Don't give up, Miss Illingworth," continued Rodney, as he started toward the door. "He's alive yet."

Just then, opportunely enough, rounding the last curve before the arch bridge, they saw the end of the other car rapidly approaching them. Had they not been so excited they could have heard the furious puffing of the engine as it drove the car at great speed up the heavy grade.

"Wait," said the conductor, "we can send the engine down for the doctor. That'll be the Colonel's car."

In a few minutes the car stopped on the siding. Out of it came Colonel Illingworth, Dr. Severence, Curtiss, and some of the officials of the Bridge Company in town. They were all greatly excited. The Colonel did not stop to put on his hat. He ran to the other car and climbed aboard.

"The dam's going," he shouted. "The bridge and the town will be flooded. We got word an hour ago by a messenger galloping down. The telephone wires are down. I ran the car up here as the quickest way to get over to the reservoir and the dam. Some of you who know the way come with me."

By this time the observation room of the car was filled with men.

"You need not worry about the dam," said Rodney.

"What do you mean?"

"A man blew up the hog-back, made a spill-way, the water rushed out through it into this ravine, you can see it below there, relieving the pressure on the dam at once. Since it has held up till now it will hold for good."

"Thank God!" cried the Colonel, sinking down into a chair and wiping the sweat off his brow. "The bridge will be safe then. By George," he gasped, "the Martlet Company could hardly have stood another loss like that. Who's the man who blew it up?"

"His name is Meade," said Rodney quietly.

"Not——?"

"Yes."

There was a long pause. Every man there knew of the failure of the International and in what estimation the old Colonel held the name of Meade because of that.

"Well, it was a fine thing," said the Colonel; "it makes up for his blundering work on the bridge."

"Beg pardon, sir," said Shurtliff, who had stood wide-eyed and white and suffering in silence ever since the engineer had been brought to the car, "it was not his blunder."

"Why, you said so yourself," cried the Colonel.

"I lied," admitted the secretary.

Quick as a flash Rodney had his notebook out. Here was the proof at last.

"Why?"

"To save the reputation of the man I loved."

"And how do I know you are not lying for this man now?" asked the Colonel harshly.

"These will prove it," said Shurtliff, extending some papers he drew out of his pocket, where he had placed them that morning half intending to tell Helen Illingworth the truth at last.

"What are these?" the Colonel asked, staring at Shurtliff, who stood erect before them, sustained more by his will than anything else, for his knees were shaking and his body quivering; yet he was glad after all, more happy than he had thought he could be, in making the revelation, in vindicating the innocent, in giving that satisfaction to Helen Illingworth, tardy, even too late, though it might be.

"Letters, sir. You will find there a blueprint of the design of the compression members," answered

Shurtliff monotonously as if he had forced his mind to a certain action and it was working automatically. "With it is a letter from Bertram Meade to his father suggesting that the lacings were too light and calling attention to the empiric formulæ of Schmidt-Chemnitz in proof of his argument. On the back of that letter Mr. Bertram Meade, Senior, made an indorsement—you know his handwriting and can identify it—'*Hold until bridge is finished and then give back to the boy. We'll show him that even Schmidt-Chemnitz doesn't know everything.*'"

Colonel Illingworth turned the paper over. There was the indorsement.

"Well, by heaven!" he began.

"There's another paper in an envelope addressed to the editor of *The New York Gazette*. Will you read it aloud, sir?"

Almost as if he had been hypnotized Colonel Illingworth took from the envelope the brief note. He read it:

"*I alone am responsible for the error in the design of the International Bridge, which has resulted in this terrible disaster. I know that my son, in an effort to shield me, will assume the responsibility. As a matter of fact, he had previously pointed out what he believed to be a structural weakness, but I refused to heed his representations and overbore his objections. The fault is entirely chargeable to me. There is no possible expiation for my blunder. The least I can do is to assume all the responsibility. The blame is mine.*

"BERTRAM MEADE."

He laid it down with the other papers.

"The demonstration is complete and absolute," he began spontaneously, amid a breathless silence. "The proofs are adequate. They would establish young Meade's innocence in any court in the land. Where is he? I have done him an injustice. I am ready to make amends," continued the Colonel.

"And while you are talking," said Helen Illingworth, who had been standing in the doorway too absorbed by the dramatic recital to interrupt it, "he's dying."

"Dying! Where?"

"He was battered to pieces by the last dynamite explosion. We brought him here."

"Were you there?"

"We saw it from the top of the mesa. Oh, don't talk any longer."

"Severence," said Illingworth, with prompt decision, "you haven't forgotten all your old medical skill. This is your job. One of you jump on the engine and bring a physician up and——"

"I'm going," said Rodney. "Who's the best doctor in town?"

"Dr. Fraser. He's a young man, but very skillful," answered one of the local bridge men.

"Bring our own Dr. Bailey up here from our hospital with him, and tell that engine driver to get down to the town and back just as quickly as he can go. Cheer up, Helen," said the Colonel. "I know that a man is not going to rehabilitate himself by such an action and have the evidence of his innocence brought out at such a moment just to die."

"Will you give me those papers, Colonel?" said Rodney. "You'll want this written up and——"

"Take them," said the Colonel.

"Will you come along with me, Mr. Shurtliff? After I see the doctors I'll want your affidavit."

"Yes, sir, anything," said Shurtliff.

"It was fine of you, Shurtliff," said Winters, "to try to shield your employer and the man you loved, but, thank God, you spoke out before it was too late. I'm sorry I pulled that gun on you; you're a man, all right, even if you don't look it," he added to himself as Shurtliff bowed and followed Rodney.

Winters stood at the door of the passageway leading to the stateroom while Helen Illingworth and Severence, who had been educated as a physician, and the old Colonel, who knew a great deal about wounds and accidents from his war experience, entered the stateroom. A new spirit had come into the relations between father and daughter and both were glad. There was no question now about the future. There would be no opposition from Colonel Illingworth. Within an hour the papers would have the story of how one man had saved a great dam, the viaduct, the town, and its people, and they would have at the same time the story of who was responsible for the fall of the International Bridge. They would have the story of the attempted self-sacrifice of the son to save the father. They would have the story of the old man's splendid and magnanimous avowal of responsibility before he died. The United States, the world, would ring with the dramatic tale.

It was as much to tell that story in his own way as

to summon medical aid that Rodney had gone for the doctor. And so the father held the daughter clasped to his side while both bent over the still unconscious man, whom Dr. Severence quickly and carefully and with wonderful skill, considering his long withdrawal from practice, examined.

"What is it?" asked the Colonel as the vice-president looked up presently. "My daughter is engaged to be married to him"—and he was rewarded by the thrill and quiver that shot through his daughter's being which he felt as he pressed her to his side—"we can't let him die now."

"He's in God's hands," answered Severence gravely. "He's been terribly pounded everywhere. His breast-bone is shattered, some of his ribs are broken. I don't know."

"That awful cut on his forehead?"

"That's nothing."

"And the other bruises?"

"They count but little, but the blow on the chest"—he shook his gray head sadly, ominously.

"Do you think anything has penetrated his lungs?" asked Helen Illingworth, as she pointed to her lover's lips, to a little bloody froth that came therefrom.

The old man nodded.

"Perhaps," he said.

"Oh, he can't die, he can't, he can't!" wailed the woman, sinking down on her knees by the bed.

"Not if any power on earth can keep him from it, my dear child," said the old Colonel tenderly, bending over her.

"Send me the porter of the car," said Severence,

"and take Miss Illingworth away. I want to get him undressed and——"

"You will call me back the minute I can come?"

"Certainly, my dear girl," said the vice-president, who had known the young woman from childhood.

XXXI

AT LAST TO THE STARS

ALL the men except Curtiss and Winters had discreetly withdrawn from the car and had gone over to the mesa to look at the lake and the outlet. Indeed the water was roaring down beneath the steel arch bridge, filling for the first time in generations the channel of the Kicking Horse. Fortunately it could flow that way without danger to the town or the viaduct below.

The Colonel led his daughter to a chair and then turned to Winters.

"You were there?" he began. "Tell me about it."

Graphically the big cattle rancher told the story of Meade's mad rush over the rocks with his two companions, of the desperate assault on the hog-back, of the success that had met their efforts to open the improvised spill-way, and then the final disaster. The recital lost nothing in his graphic relation.

"It was fine, it was magnificent," said the Colonel, patting his daughter's shoulder. "Where are the two who went with him?"

"They're outside there," said Winters.

The old Colonel went to the door of the car and called the two men into the car.

"In the bank down in Coronado there's a thousand dollars of mine for each of you," he said promptly.

"We didn't do it for money, sor," said the big

Irishman, "although 'twill be welcome enough, but how is Mr. Roberts?"

"You mean the man who blew up the hog-back?"

"Si, signore, a greata man he ees," said the little Italian.

"I wish I could say he was all right, but there's a doctor with him and we have sent for the best physicians in town. He's horribly hurt."

"But, plaise God, he may pull through, sor. The Holy Virgin an' the Saints presarve him," said the Irishman, making the sign of the cross.

And in his own language little Funaro breathed a similar prayer and with his grimy, toil-stained hand he made the same gesture.

"Murphy," shouted a voice from the pines on the side of the hill between the car and the mesa.

"That'll be Mr. Vandeventer, the resident engineer," said Murphy.

Colonel Illingworth turned to the door again.

"Where's Roberts?" cried Vandeventer, stumbling down the hill. He was haggard and worn and weary to the point of exhaustion, but as soon as he had been assured of the safety of the dam—and before he left the water was visibly receding—he had started out to seek the engineer whom he had, in his mind in the excitement of the moment, accused of desertion.

"He's here in my car, sir," said Colonel Illingworth.

"And who are you, may I ask?" said Vandeventer, crossing the track and swinging himself upon the platform of the car.

"I am Colonel Illingworth, president of the Martlet Bridge Company."

"But Roberts?"

"His name is not Roberts. It's Meade."

"What? The International man?"

"Yes."

"I knew he was an engineer. Well, he's made up for his failure there."

"He did not fail there any more than he failed here," said the Colonel.

"Where is he?"

"It's a long story."

"It can wait," said Vandeventer brusquely. "I want to thank him for saving the dam and the lives of the men on it, and the town, and the railroad, and the bridge."

"I don't know whether you can thank him or not," said the Colonel.

"You don't mean——"

"He was terribly hurt by the last explosion and they brought him here."

"Can I see him?"

For answer Colonel Illingworth pointed to the door.

"This is my daughter. Your name is Vandeventer, is it not? Helen, this is the engineer who is building the dam. He has come to ask after his man."

"I've done everything I can for him," said Severence, coming out of the stateroom, followed by the porter, as Vandeventer shook hands with the girl. "He's still unconscious, but seems to breathe a little easier."

Into the little room the woman and the four men crowded. Vandeventer, accompanied by Murphy and Funaro, followed the Colonel. Neither of the workmen

would be left out. There lay the engineer, his face as white as the linen of the pillow or the bandage which had been deftly tied around his head. One hand, still grimy and mud-stained, lay on the sheet. Helen Illingworth knelt down and kissed it and laid her head on the bed.

"He is to be my husband if he lives," she said simply.

"A man and an engineer he is," whispered Vandeventer.

"I misjudged you, Meade," said the Colonel softly, speaking as if the unconscious man could hear. "I condemned you. I wish to heaven you could hear me make amends now."

"Begob," whispered Murphy, "you'd ought to seen him run wid the dinnamite."

The voice of the Italian murmured words which they knew were prayers and though they came from humble lips they brought relief to all. They entered deeply into Helen Illingworth's heart and mingled with her own petitions, frantic, fervent, imperative, although she offered them to Almighty God as from a woman broken. Presently they all filed out of the room, leaving Helen Illingworth alone with what was left of life in the crushed body of the man she had never loved so much before.

In the observation room Vandeventer told them of the fight for the dam and how they had reached their maximum power of resistance and more, and that the relief came in the very nick of time. Meanwhile the engine driver had burned up the track going and coming and in less than an hour he was back with two sur-

geons and a trained nurse. Was it their skill and care and watchfulness that finally brought Meade back to consciousness, or was it the passionate, consuming intensity of will and purpose of the woman who loved him, who could scarcely be driven from his side? Well, whatever the reason, after many days he passed from death into life and came back again.

He was conscious of Helen's presence and lay quietly enveloped in her love long before he could talk coherently or question. Indeed, with Rodney and Winters, and old Shurtliff, who swore to himself that he would never forgive himself if Meade did not recover, and the Colonel, and Vandeventer, and all the men of the force, who used to stroll over after hours and just sit on the side of the track and stare at the car where the man who had saved them was fighting for his life as desperately as they had fought to save the dam, Meade was surrounded by such an atmosphere of admiration and devotion as might have stayed the hand of death itself. There came a day when the physician said he could talk a little.

"I saw you," Helen whispered. "I was standing on the high hill watching, looking down upon you just before——"

"But I shall look up to you all the rest of my life," said the man, as the woman knelt, as was her wont, by the side of the bed. She kissed his hand, thin, wasted, but white and clean now.

"No, I to you," she murmured, as she pressed her lips to his fingers.

"Look up a little higher, then," whispered Meade with some of the old humor.

"You mean?"

The voiceless movement of his lips told her the story. She raised herself and kissed them lightly.

"I haven't dared to ask that before," said the man, closing his eyes. "I wasn't strong enough to stand that."

"But you're going to get strong; you must. I'd like to kiss you forever," said the woman with pitying tenderness and great joy.

"It's heavenly now, but I shall have to go away again when I am able and——"

"We are never going to be parted again."

"I cannot let you marry a discredited man, a failure."

"Don't you know," said the woman, rising, "that the whole United States rings with your exploit, that the splendid saving of the dam has caught the fancy of the people as it deserves and you are a hero everywhere and to everybody?"

"But the International Bridge and its failure?"

Unbeknown to the two the Colonel had stopped in the doorway.

"We know the truth now, my boy," said the old man, coming into the room. "It was your father's fault, not yours."

It was characteristic of Meade's temper and temperament that his white lips closed in a straight line at this.

"Where's Shurtliff?" he asked, after a little silent communing with himself.

The old man had come in and out of the room like a ghost during his slow recovery. Colonel Illingworth

turned away and summoned the secretary. Rodney and Winters came, too.

"Shurtliff," said Meade faintly but firmly, "tell them again who is responsible for the failure of the International."

"Forgive me, Mr. Meade," said Shurtliff, "but it was your brave old father's fault."

"You see," said the Colonel.

"We knew it all the time," said Rodney.

"But Mr. Shurtliff bravely gave us the final proof," said Winters.

"Those papers?" said Meade.

Shurtliff nodded.

"And your father's own letter that he wrote the papers before his heart broke," said Rodney; "I'll read it to you presently."

"Why did you do it, Shurtliff?"

"To right a great wrong, sir. I saw that we were mistaken to try to spare the dead at the expense of the living, to wreck your life and the future, and the happiness of Miss Illingworth. God bless her for her kindness to a lonely old man. And so when you were brought here dead I told them the truth and gave them the papers."

"Gentlemen," said Meade, making a last try, "it is useless to deny it now, but for the sake of my father's fame you won't let anyone know?"

"Old man," said Rodney, "it was on the wires an hour afterward and the whole United States knows it now. Your father made the mistake; his letter admitted it bravely. The world honors him, it honors you."

"Rodney," said Meade, "I wish you hadn't done it."

"It was for Miss Illingworth's happiness and yours that I did it," said Rodney. "And how much that cost me," he added, the confession being wrung from him, "no one can ever know."

He turned and left the room. Winters followed him full of sympathy and comprehension.

"Let me go out alone, old man," said Rodney. "I'll be back presently. This is the last fight I've got to make."

Winters watched him from the steps of the car as he disappeared in the pine trees *en route* to the mesa to fight it out under the open sky alone. The others left the room also, last of all Shurtliff.

"You forgive me, Mr. Meade. I've been through hell itself," said the old man, "in these last six months."

"Freely," said Meade.

And Shurtliff went away with a lighter heart than he had borne for many a long day.

The two lovers were alone again.

"You see," said Helen, "there's nothing can keep us apart now."

"Nothing, thank God," whispered the man.

"But I am sorry that it all came out this way. I'm sorry not only because of your suffering, but for other reasons—Rodney for one. He—it's too bad! It was not necessary for you to get yourself almost killed to win me, I mean, for wherever and whenever I found you I was resolved to marry you, willy-nilly."

"And is it true that poor old Rod had grown to care?" he asked, putting by the academic discussion.

The woman nodded.

"I'm very sorry. I can't help it. We were always together, talking about you," she said.

"And he couldn't help it, either," said Meade. "Somehow I believe he was the better man for you to have taken."

But he looked at her wistfully and anxiously as he spoke.

"I won't argue with you," said the girl, bending close to him. "I'll only say that I know I have the best man in all the world, but if he were the worst, I would rejoice to have him just the same."

PRINTED IN THE UNITED STATES OF AMERICA